Layout of earthing system of 220 kv switchyard

S.O.Katiyar

AGM EMD

FGPS NTPC Faridabad

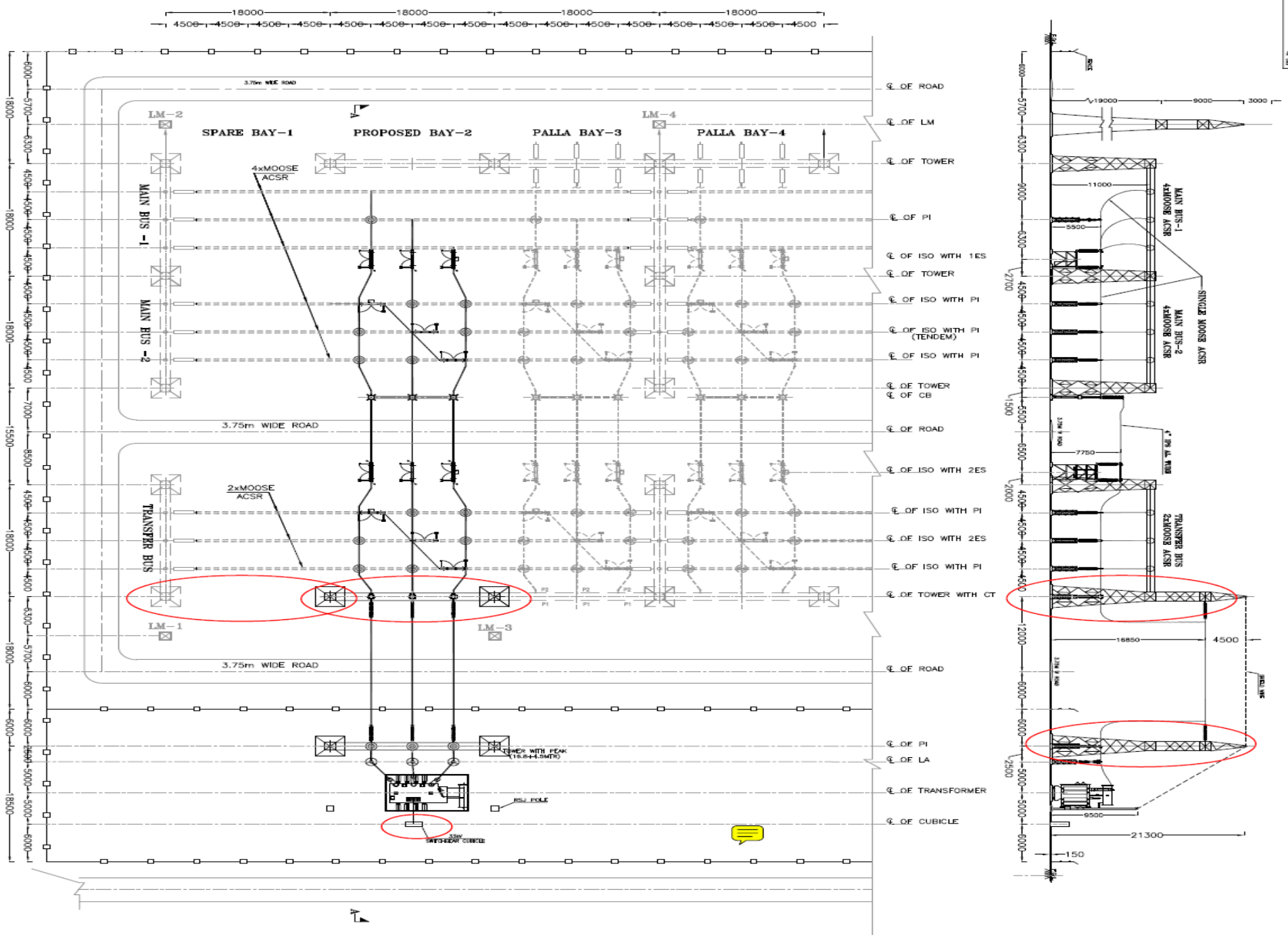
SPARE BAY-1
PROPOSED BAY-2
PALLA BAY-3
PALLA BAY-4
LM-2
LM-4
LM-1
LM-3
4xMOOSE ACSR
2xMOOSE ACSR
MAIN BUS -1
MAIN BUS -2
TRANSFER BUS
3.75m WIDE ROAD
℄ OF ROAD
℄ OF LM
℄ OF TOWER
℄ OF PI
℄ OF ISO WITH 1ES
℄ OF TOWER
℄ OF ISO WITH PI
℄ OF ISO WITH PI (TENDEM)
℄ OF ISO WITH PI
℄ OF TOWER
℄ OF CB
℄ OF ROAD
℄ OF ISO WITH 2ES
℄ OF ISO WITH PI
℄ OF ISO WITH 2ES
℄ OF ISO WITH PI
℄ OF TOWER WITH CT
℄ OF ROAD
℄ OF PI
℄ OF LA
℄ OF TRANSFORMER
℄ OF CUBICLE
TOWER WITH PEAK (15.8+1.5MTR)
RSJ POLE
33kV SWITCHGEAR CUBICLE
MAIN BUS-1 4xMOOSE ACSR
MAIN BUS-2 4xMOOSE ACSR
SINGLE MOOSE ACSR
TRANSFER BUS 2xMOOSE ACSR
4" DIA AL PIPE
19000
9000
3000
11000
5500
7750
16850
4500
9500
21300
150

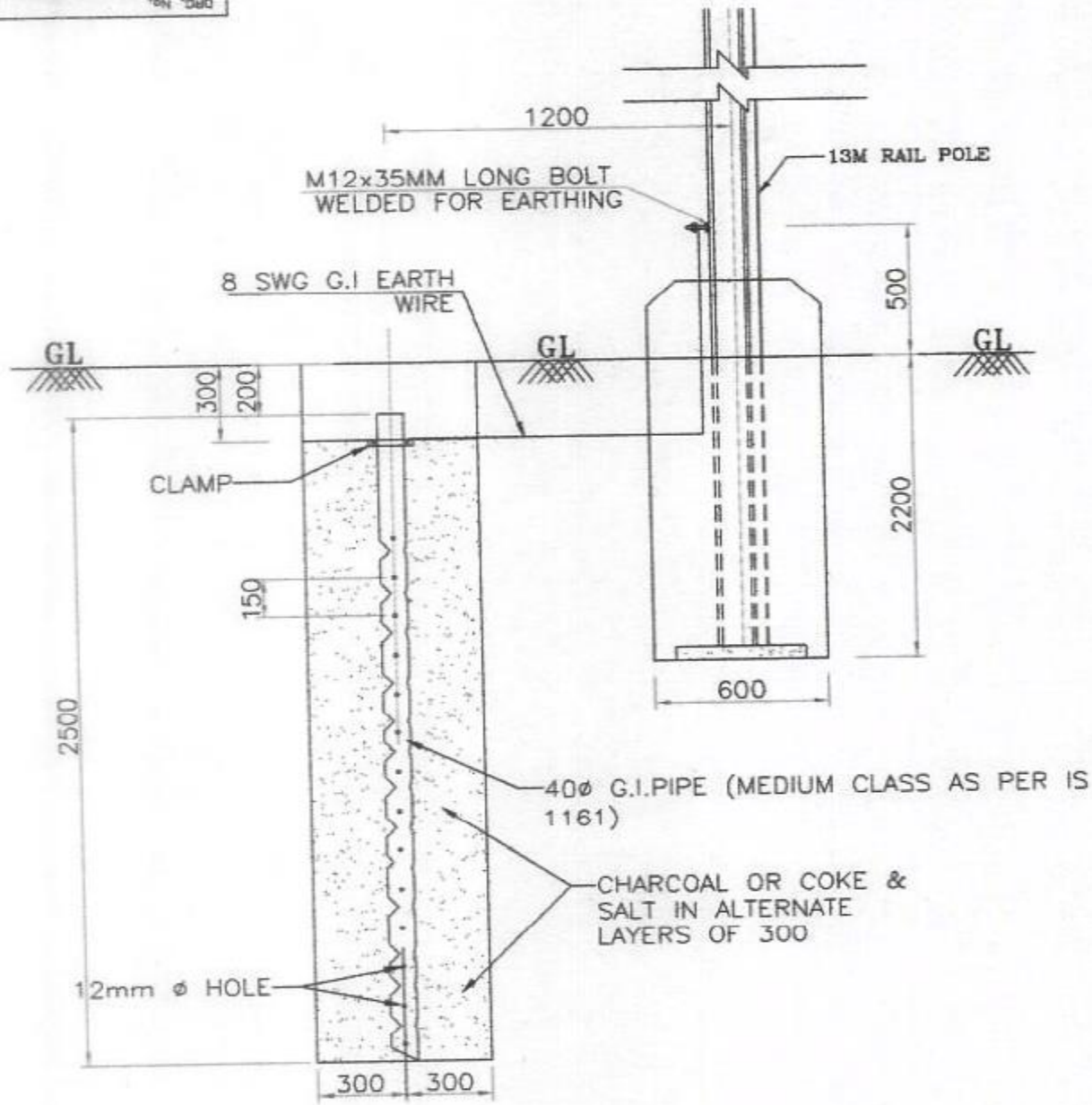

EARTHING FOR HARD, STIFF OR MEDIUM CLAY

DRG. No. EN12-145-E-STR-3403

REV 00

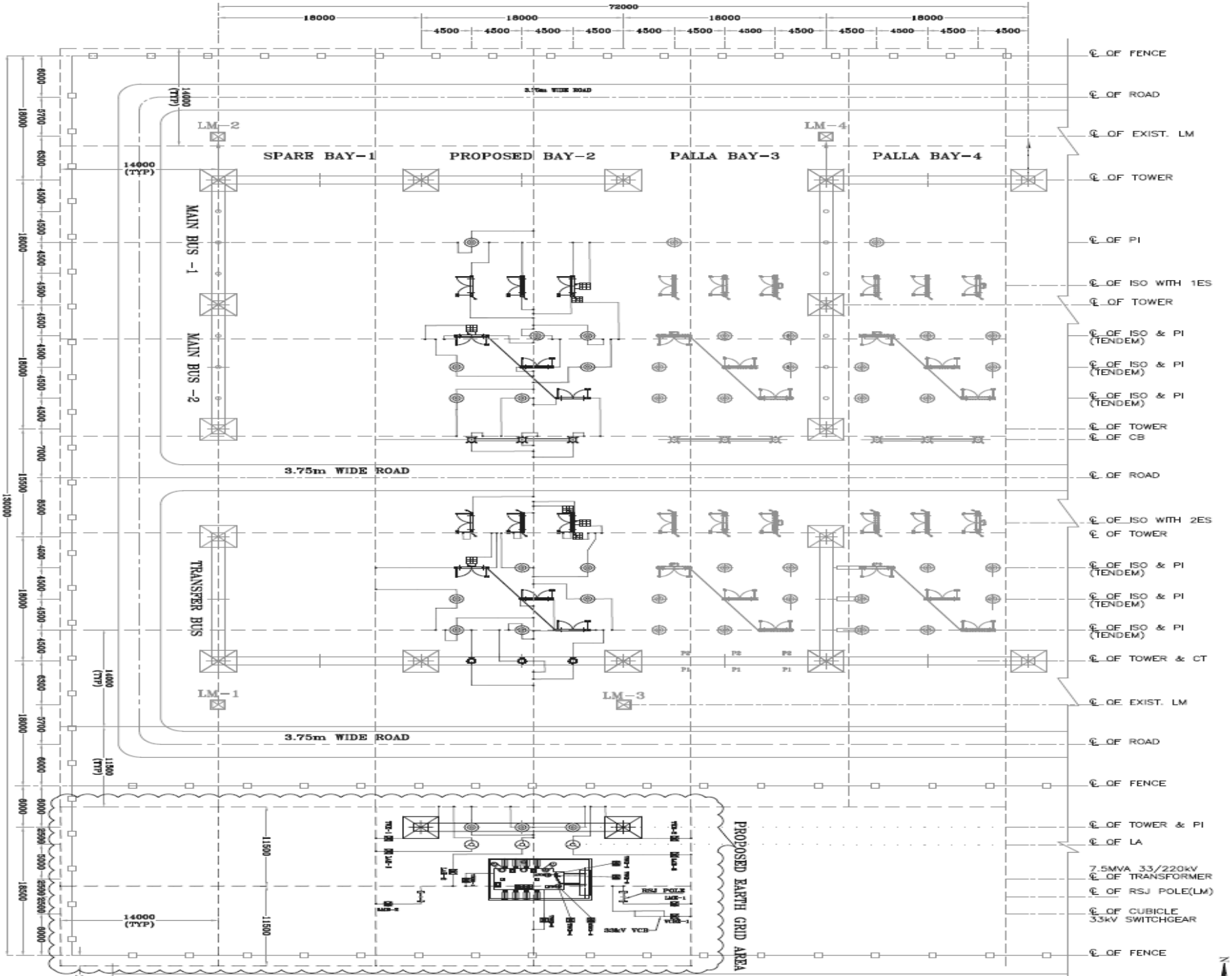
72000
18000
4500
SPARE BAY-1
PROPOSED BAY-2
PALLA BAY-3
PALLA BAY-4
LM-1
LM-2
LM-3
LM-4
MAIN BUS -1
MAIN BUS -2
TRANSFER BUS
3.75m WIDE ROAD
14000 (TYP)
11500
PROPOSED EARTH GRID AREA
33kV VCB
RSJ POLE
TO MAIN EARTH MAT.
℄ OF FENCE
℄ OF ROAD
℄ OF EXIST. LM
℄ OF TOWER
℄ OF PI
℄ OF ISO WITH 1ES
℄ OF ISO & PI (TENDEM)
℄ OF CB
℄ OF ISO WITH 2ES
℄ OF TOWER & CT
℄ OF TOWER & PI
℄ OF LA
7.5MVA 33/220kV
℄ OF TRANSFORMER
℄ OF RSJ POLE(LM)
℄ OF CUBICLE
33kV SWITCHGEAR

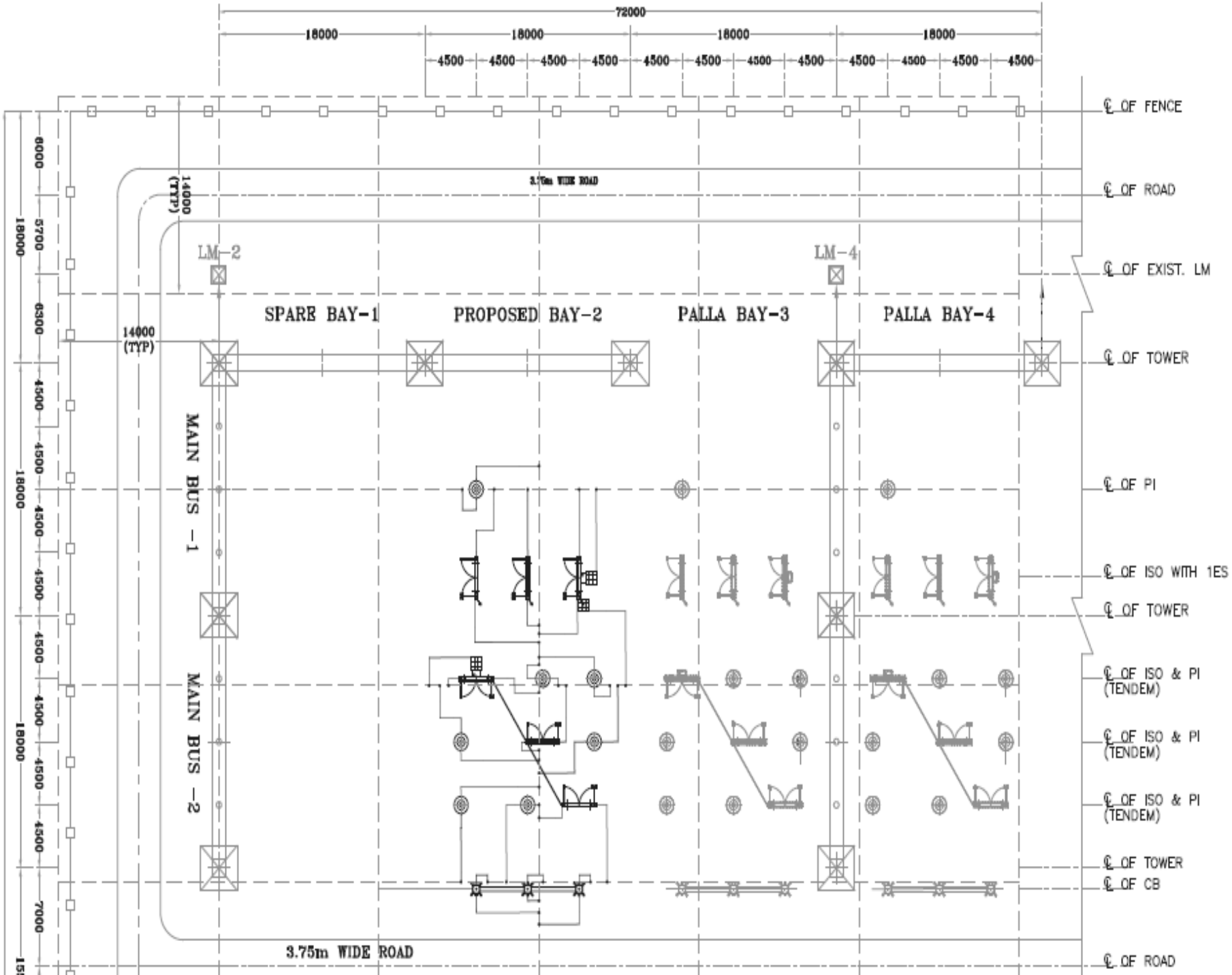
72000
18000
18000
18000
18000
4500
4500
4500
4500
4500
4500
4500
4500
4500
4500
4500
4500
℄ OF FENCE
℄ OF ROAD
℄ OF EXIST. LM
℄ OF TOWER
℄ OF PI
℄ OF ISO WITH 1ES
℄ OF TOWER
℄ OF ISO & PI (TENDEM)
℄ OF ISO & PI (TENDEM)
℄ OF ISO & PI (TENDEM)
℄ OF TOWER
℄ OF CB
℄ OF ROAD
3.75m WIDE ROAD
14000 (TYP)
LM-2
LM-4
SPARE BAY-1
PROPOSED BAY-2
PALLA BAY-3
PALLA BAY-4
MAIN BUS -1
MAIN BUS -2
3.75m WIDE ROAD
6000
5700
6300
4500
4500
4500
4500
4500
4500
4500
7000
18000
18000
18000

3.75m WIDE ROAD
℄ OF ROAD
℄ OF ISO WITH 2ES
℄ OF TOWER
℄ OF ISO & PI (TENDEM)
℄ OF ISO & PI (TENDEM)
℄ OF ISO & PI (TENDEM)
℄ OF TOWER & CT
℄ OF EXIST. LM
℄ OF ROAD
℄ OF FENCE
TRANSFER BUS
LM-1
LM-3
3.75m WIDE ROAD
130000
15500
8500
4500
4500
4500
4500
18000
6300
5700
18000
6000
14000 (LTLF)
11500 (LTLF)

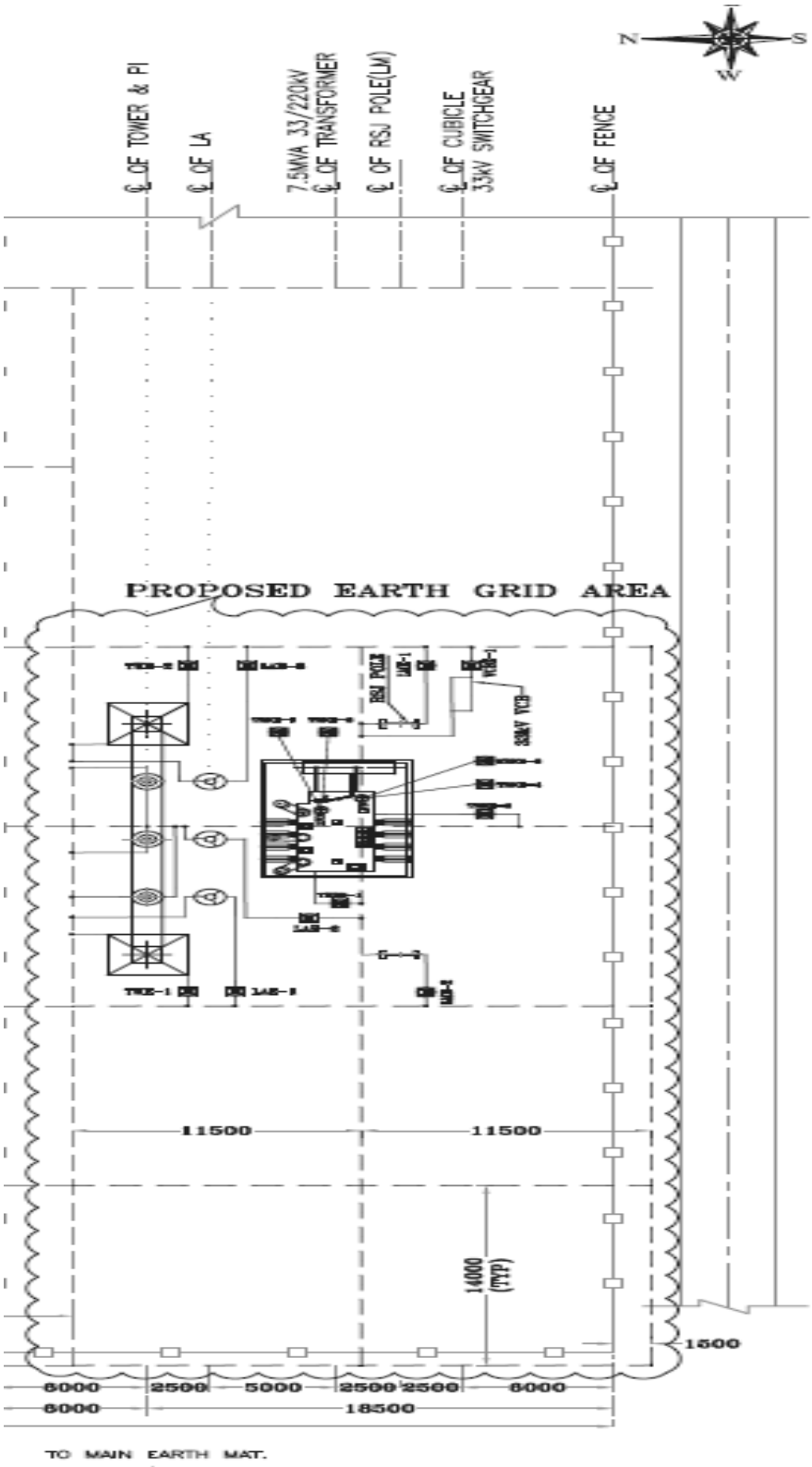
N
S
℄ OF TOWER & PI
℄ OF LA
7.5MVA 33/220kV
℄ OF TRANSFORMER
℄ OF RSJ POLE(LM)
℄ OF CUBICLE
33kV SWITCHGEAR
℄ OF FENCE
PROPOSED EARTH GRID AREA
11500
11500
14000
(TYP)
1500
6000
2500
5000
2500
2500
6000
6000
18500
TO MAIN EARTH MAT.

220KV CURRENT TRANSFORMER

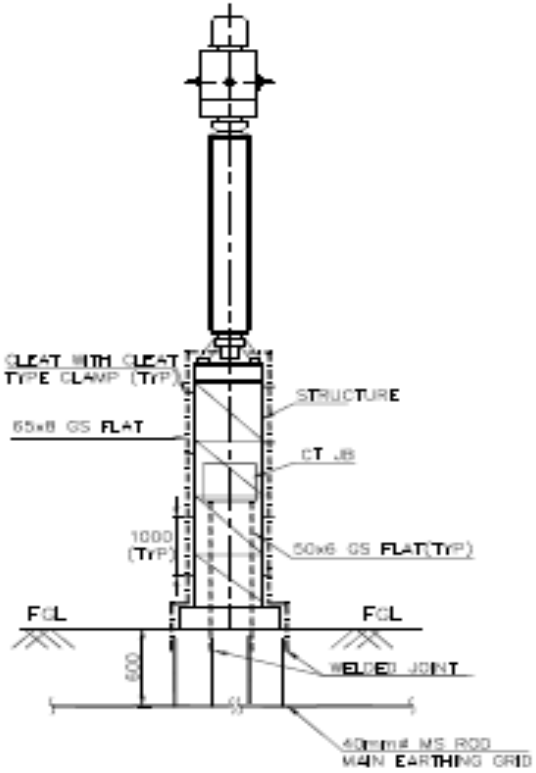

LEGEND:-

————	40MM DIA M.S ROD
—·—·—	65x8 GS FLAT
- - - - - -	50x6 GS FLAT

DESCRIPTION	QTY (3#) Nos.
RISER 65x8 GS FLAT	6
RISER 50x6 GS FLAT	2
No. OF PIPE ELECTRODE	–

NOTE:-

1. ALL DIMENSIONS MENTIONED ARE IN MM.
2. CLEAT CLAMP SHALL BE PROVIDED AT 1000 mm INTERVAL

220KV CAPACITIVE VOLTAGE TRANSFORMER

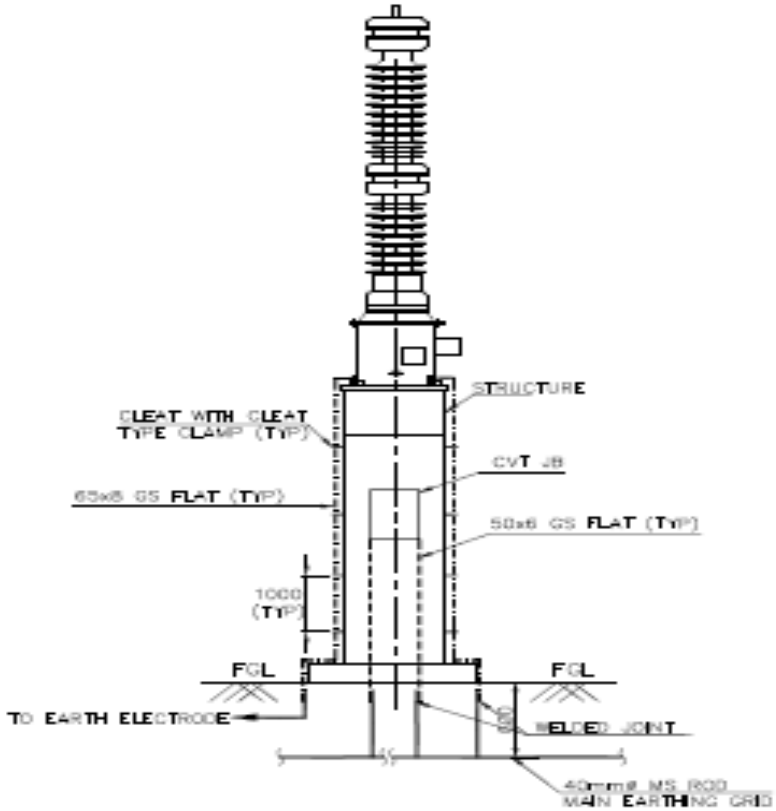

LEGEND:-

———	40MM DIA M.S ROD
—·—·—	65x8 GS FLAT
- - - - - -	50x6 GS FLAT

DESCRIPTION	QTY (3ø) Nos.
RISER 65x8 GS FLAT	6
RISER 50x6 GS FLAT	2
No. OF PIPE ELECTRODE	3

NOTE:-

1. ALL DIMENSIONS MENTIONED ARE IN MM.
2. CLEAT CLAMP SHALL BE PROVIDED AT 1000 mm INTERVAL
3. SECONDARY TERMINAL BLOCK EARTHING TO BE DONE AS RECOMMENDED BY THE MANUFACTURER.
4. HF TERMINAL ON CVT WITH WAVE TRAP SHALL NOT BE EARTHED.

220KV CIRCUIT BREAKER

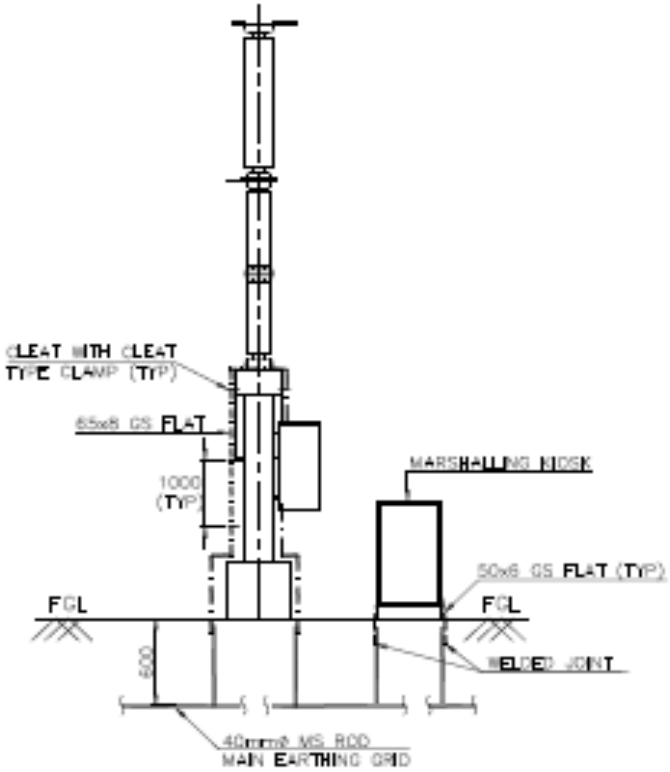

NOTES.

1. ONLY 'Y' PHASE BREAKER SHOWN FOR CLARIFTY

LEGEND:-

———	40MM DIA M.S ROD
—·—·—	65x8 GS FLAT
- - - - - -	50x6 GS FLAT

DESCRIPTION	QTY (3ø) Nos.
RISER 65x8 GS FLAT	6
RISER 50x6 GS FLAT	2
No. OF ROD ELECTRODE	–

NOTE:-

1. ALL DIMENSIONS MENTIONED ARE IN MM.
2. CLEAT CLAMP SHALL BE PROVIDED AT 1000 mm INTERVAL

220KV HORIZONTAL CENTRE BREAK ISOLATOR WITHOUT EARTH SWITCH

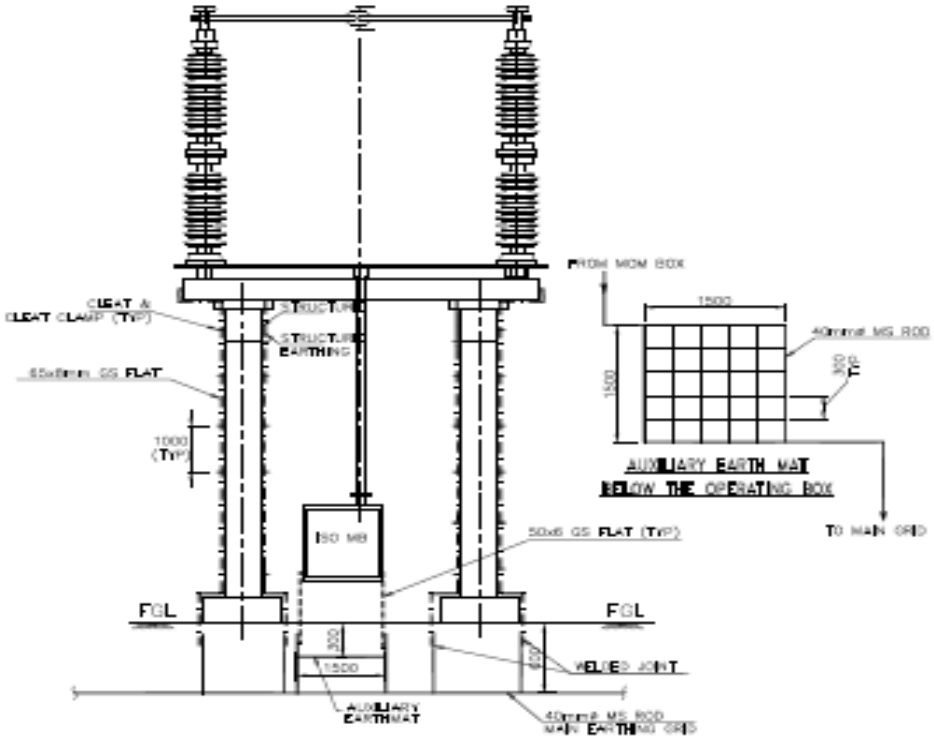

LEGENDs–

———	40MM DIA M.S ROD
— · — · —	65x8 GS FLAT
- - - - - -	50x6 GS FLAT

DESCRIPTION	QTY (3ø) Nos.
RINER 65x8 GS FLAT	12
RINER 50x6 GS FLAT	2
No. OF PIPE ELECTRODE	—
No. OF AUX. EARTH MAT	1

NOTE:–

1. ALL DIMENSIONS MENTIONED ARE IN MM.
2. CLEAT CLAMP SHALL BE PROVIDED AT 1000 mm INTERVAL

220KV HORIZONTAL CENTRE BREAK ISOLATOR WITH ONE EARTH SWITCH

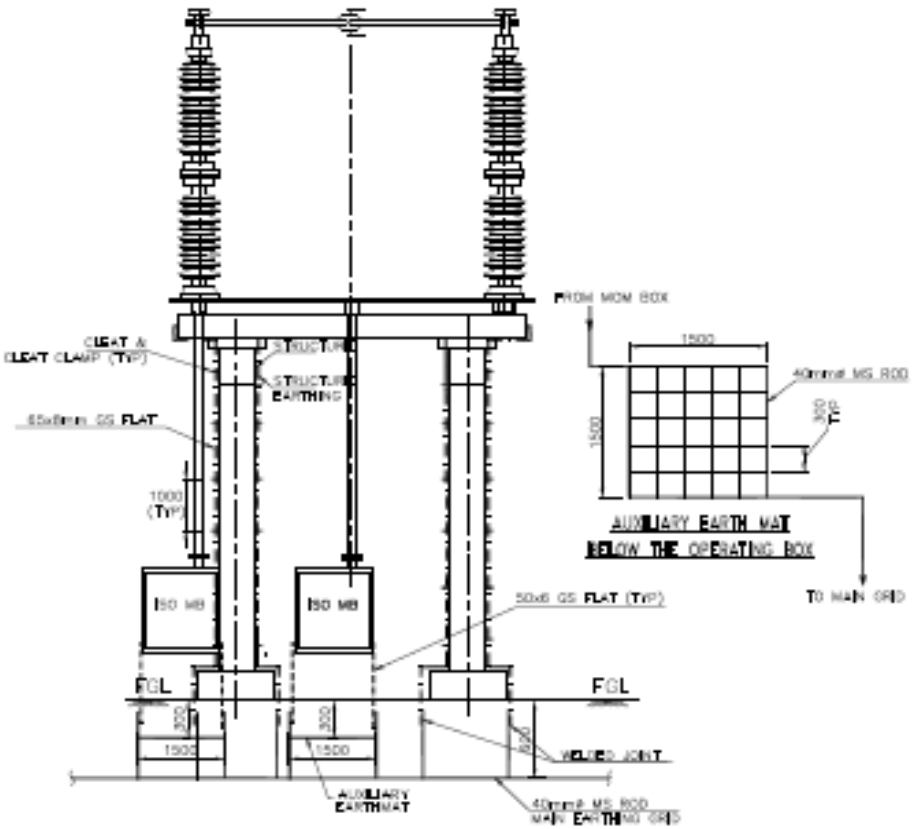

LEGENDs-

———	40MM DIA M.S ROD
— · — · —	65x8 GS FLAT
- - - - - -	50x6 GS FLAT

DESCRIPTION	QTY (Ne) Nos.
RISER 65x8 GS FLAT	12
RISER 50x6 GS FLAT	5
No. OF PIPE ELECTRODE	—
No. OF AUX. EARTH MAT	2

NOTE:-

1. ALL DIMENSIONS MENTIONED ARE IN MM.
2. CLEAT CLAMP SHALL BE PROVIDED AT 1000 mm INTERVAL

220KV HORIZONTAL CENTRE BREAK ISOLATOR WITH TWO EARTH SWITCH

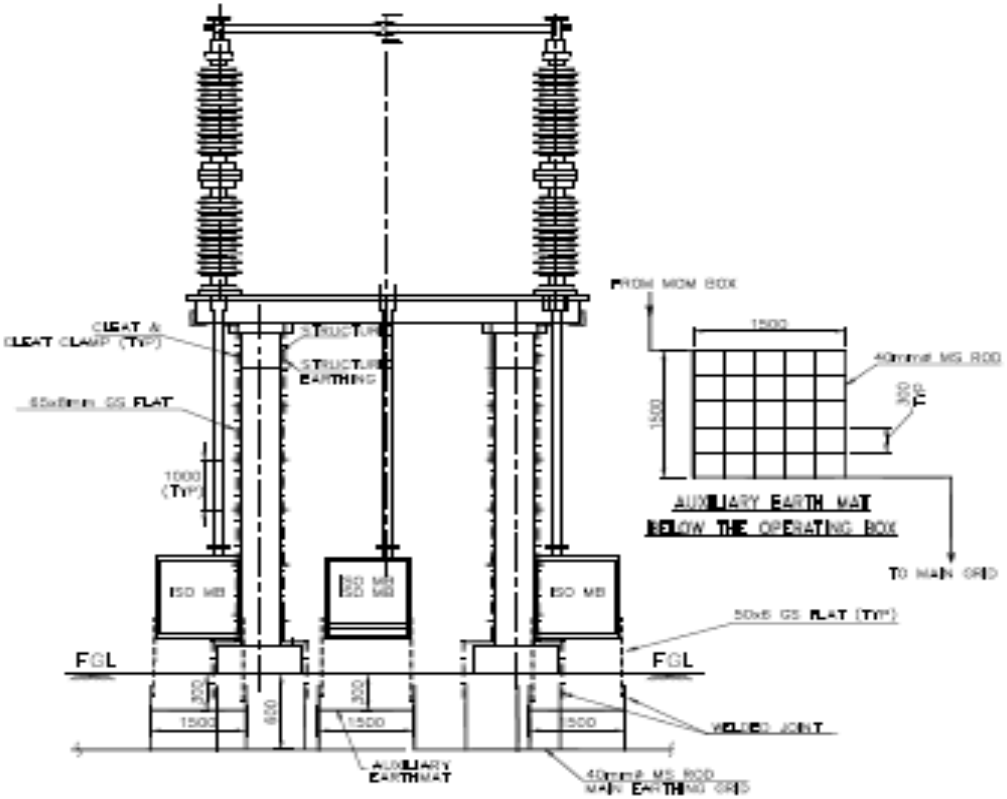

LEGENDs–

———	40MM DIA M.S ROD
— · — · —	65x8 GS FLAT
- - - - - -	50x6 GS FLAT

DESCRIPTION	QTY (3ø) Nos.
RIBER 65x8 GS FLAT	12
RIBER 50x6 GS FLAT	6
No. OF PIPE ELECTRODE	—
No. OF AUX. EARTH MAT	3

NOTE:–

1. ALL DIMENSIONS MENTIONED ARE IN MM.
2. CLEAT CLAMP SHALL BE PROVIDED AT 1000 mm INTERVAL

220KV LIGHTNING ARRESTER

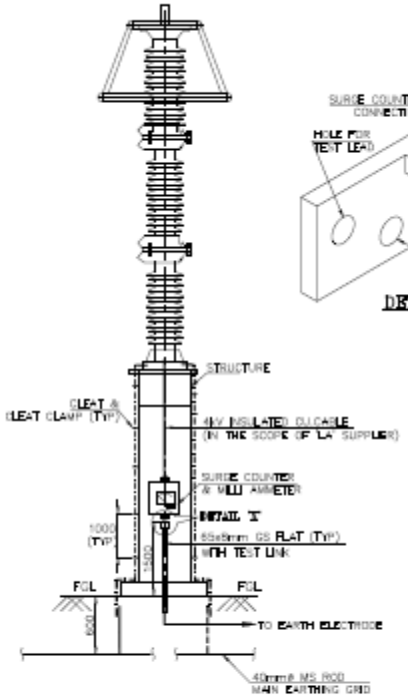

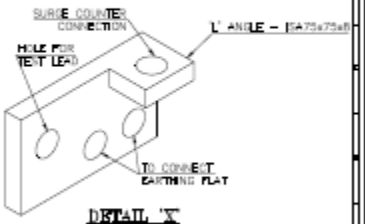

DETAIL 'X'

DESCRIPTION	QTY (3ø) Nos.
RISER 65x8 GS FLAT	9
RISER 50x6 GS FLAT	–
No. OF ROD ELECTRODE	3
No. OF TEST LINK	3

NOTE:
1. INSULATED CABLE SHALL BE CLAMPED AT BOTH ENDS OF THE STRUCTURE.

LEGEND:-

———	40MM DIA M.S ROD
—·—·—	65x8 GS FLAT
– – – – –	50x6 GS FLAT

DESCRIPTION	QTY (3ø) Nos.
RISER 65x8 GS FLAT	9
RISER 50x6 GS FLAT	—
No. OF PIPE ELECTRODE	3

NOTE:-
1. ALL DIMENSIONS MENTIONED ARE IN MM.
2. CLEAT CLAMP SHALL BE PROVIDED AT 1000 mm INTERVAL

220KV POST INSULATOR

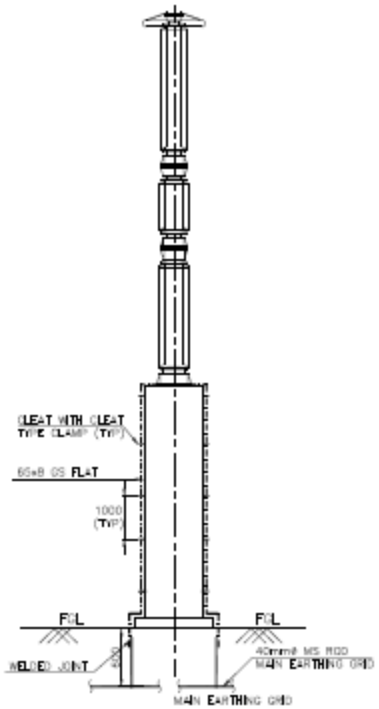

LEGEND:-

———	40MM DIA M.S ROD
—·—·—	65x8 GS FLAT
- - - - - -	50x6 GS FLAT

DESCRIPTION	QTY (3Ø) Nos.
RISER 65x8 GS FLAT	6
RISER 50x6 GS FLAT	—
No. OF PIPE ELECTRODE	—

NOTE:-

1. ALL DIMENSIONS MENTIONED ARE IN MM.
2. CLEAT CLAMP SHALL BE PROVIDED AT 1000 mm INTERVAL

POWER TRANSFORMER

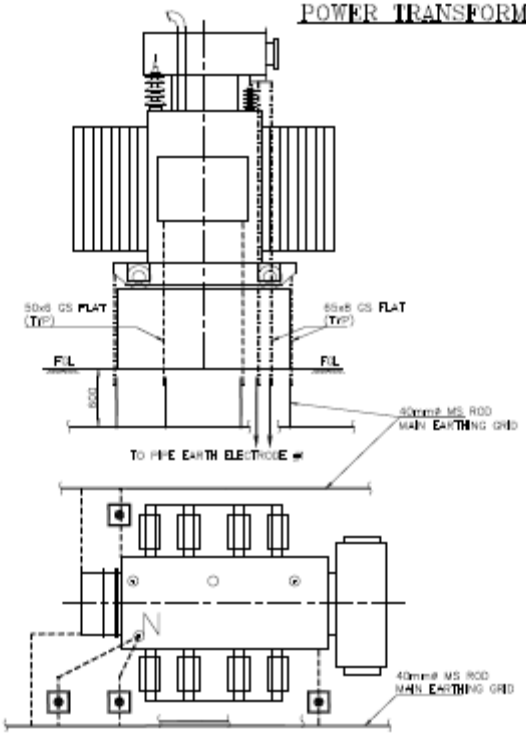

LEGEND:-

———	40MM DIA M.S ROD
—·—·—	65x6 GS FLAT
- - - - - -	50x6 GS FLAT

DESCRIPTION	QTY Nos.
RISER 65x6 GS FLAT	4
RISER 50x6 GS FLAT	2
No. OF PIPE ELECTRODE	4

NOTE:-

1. ALL DIMENSIONS MENTIONED ARE IN MM.

TOWER WITH PEAK

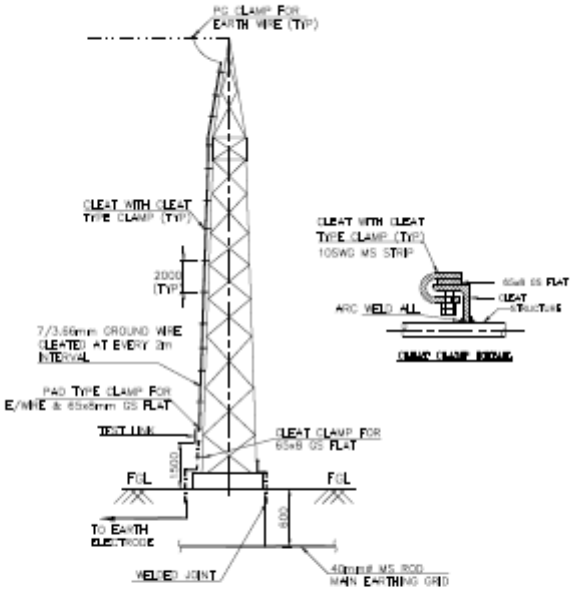

LEGEND:-

———	40MM DIA M.S ROD
—·—·—	65x6 GS FLAT
– – – – – –	50x6 GS FLAT

DESCRIPTION	QTY Nos.
RISER 65x6 GS FLAT	2
RISER 50x6 GS FLAT	–
No. OF ROD ELECTRODE	1
No. OF TEST LINK	1
No. OF PAD TYPE CLAMP	2
No. OF PG CLAMP	1

NOTE:-

1. ALL DIMENSIONS MENTIONED ARE IN MM.
2. CLEAT CLAMP SHALL BE PROVIDED AT 1000 mm INTERVAL
3. TEST LINK SHALL BE PROVIDED AT A HEIGHT OF 1500mm FROM THE GROUND LEVEL

TOWER WITHOUT PEAK

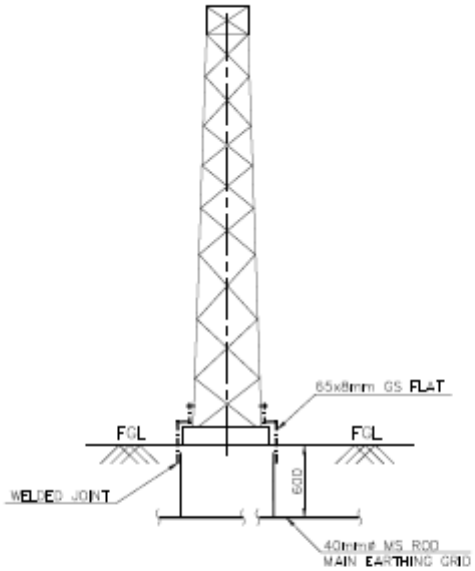

LEGEND:-

———	40MM DIA M.S ROD
—·—·—	65x8 GS FLAT
- - - - - -	50x6 GS FLAT

DESCRIPTION	QTY Nos.
RISER 65x8 GS FLAT	2
RISER 50x6 GS FLAT	--
No. OF PIPE ELECTRODE	--

NOTE:-

1. ALL DIMENSIONS MENTIONED ARE IN MM.
2. CLEAT CLAMP SHALL BE PROVIDED AT 1000 mm INTERVAL
3. TEST LINK SHALL BE PROVIDED AT A HEIGHT OF 1500mm FROM THE GROUND LEVEL

BAY MARSHALLING KIOSK

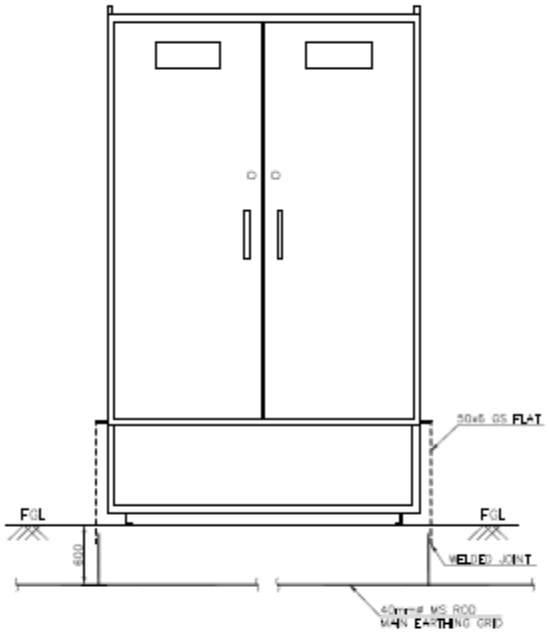

LEGEND:-

———	40MM DIA M.S ROD
—·—·—	65x6 GS FLAT
- - - - - -	50x6 GS FLAT

DESCRIPTION	QTY Nos.
RISER 65x6 GS FLAT	—
RISER 50x6 GS FLAT	2
No. OF PIPE ELECTRODE	—

NOTE:-

1. ALL DIMENSIONS MENTIONED ARE IN MM.

SCHEME 14 OF 18

TYP. GATE & FENCE POST

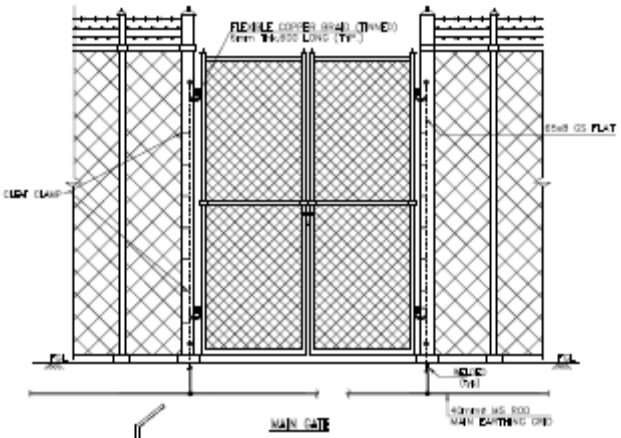

MAIN GATE

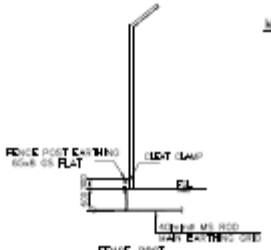

FENCE POST
(ALTERNATE FENCE POST)

NOTE:

1. NO OF RIBERS FOR FENCE POST= 1
2. NO OF RIBERS FOR GATE – 2
3. ALL GATES & EVERY ALTERNATE FENCE POST SHALL BE CONNECTED TO EARTHING GRID

LEGEND:–

———	40MM DIA MS ROD
— · — · —	65x8 GS FLAT
– – – – – –	50x8 GS FLAT

DESCRIPTION	QTY Nos.
RIBER 65x8 GS FLAT	3
RIBER 50x8 GS FLAT	--
No. OF PIPE ELECTRODE	--

NOTE:–
1. ALL DIMENSIONS MENTIONED ARE IN MM.

SHEET 15 OF 18

TYPICAL EARTHING DETAIL FOR CABLE TRENCH

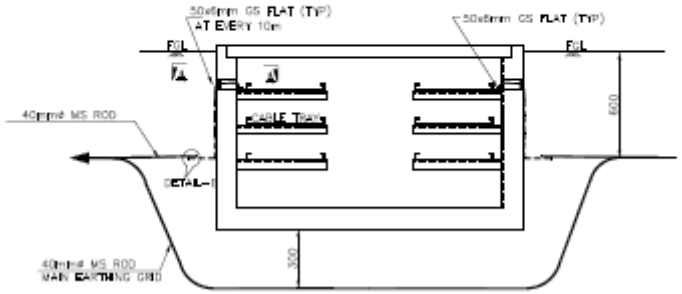

TYPICAL CROSS SECTION OF CABLE TRENCH

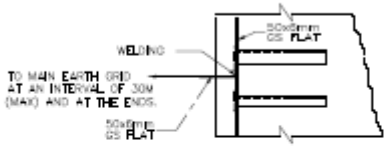

VIEW – AA

LEGEND:–

———	40MM DIA M.S ROD
—·—·—	65x6 GS FLAT
– – – – –	50x6 GS FLAT

NOTES:–

1. ALL DIMENSIONS MENTIONED ARE IN MM.
2. GI FLAT SHALL RUN ON TOP TIER ALL ALONG THE CABLE TRENCHES & WELDED TO EACH OF THE RACKS.
3. GI FLAT SHALL BE EARTHED AT 30m INTERVAL AND ALSO AT BOTH ENDS.

DETAILS OF ROD EARTH PIT

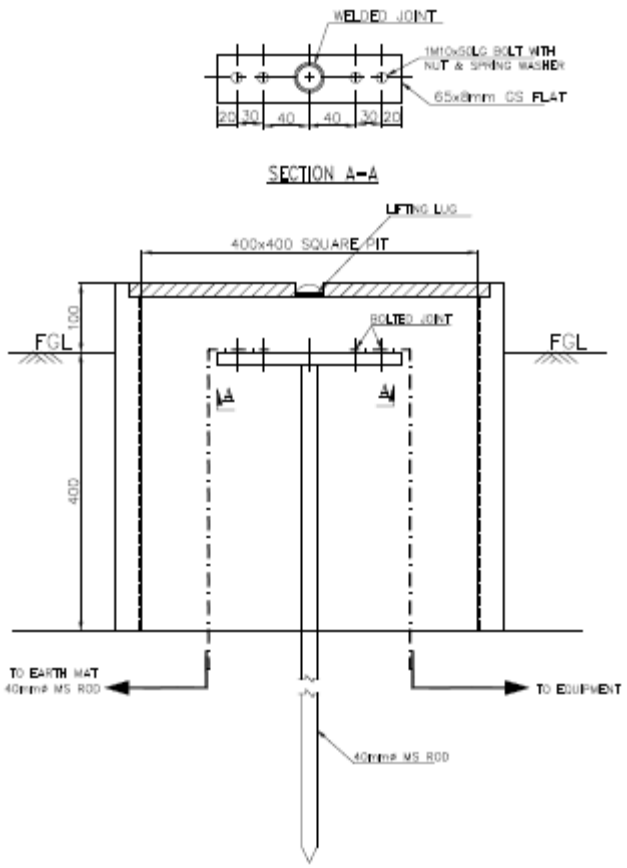

EQUIPMENT EARTHING DETAIL WELDED JOINTS FOR SOLID RODS

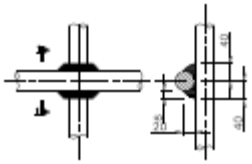

PLAN SECTION 1-1

CROSS JOINT

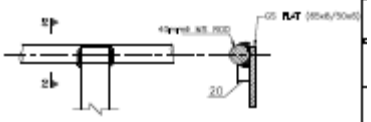

PLAN SECTION 2-2

EARTH STRIP TO SOLID ROD JOINT

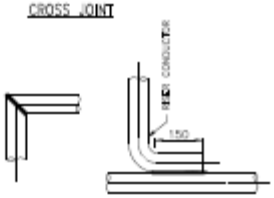

CROSS JOINT

'T' JOINT

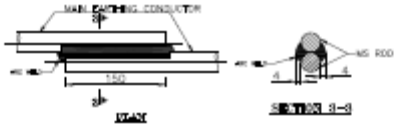

PLAN SECTION 3-3

TYPICAL OVER LAPPING JOINT OF TWO CONDUCTORS