Harmony

एनटीपीसी NTPC

Electric shock and prevention

Harmony

एनटीपीसी NTPC

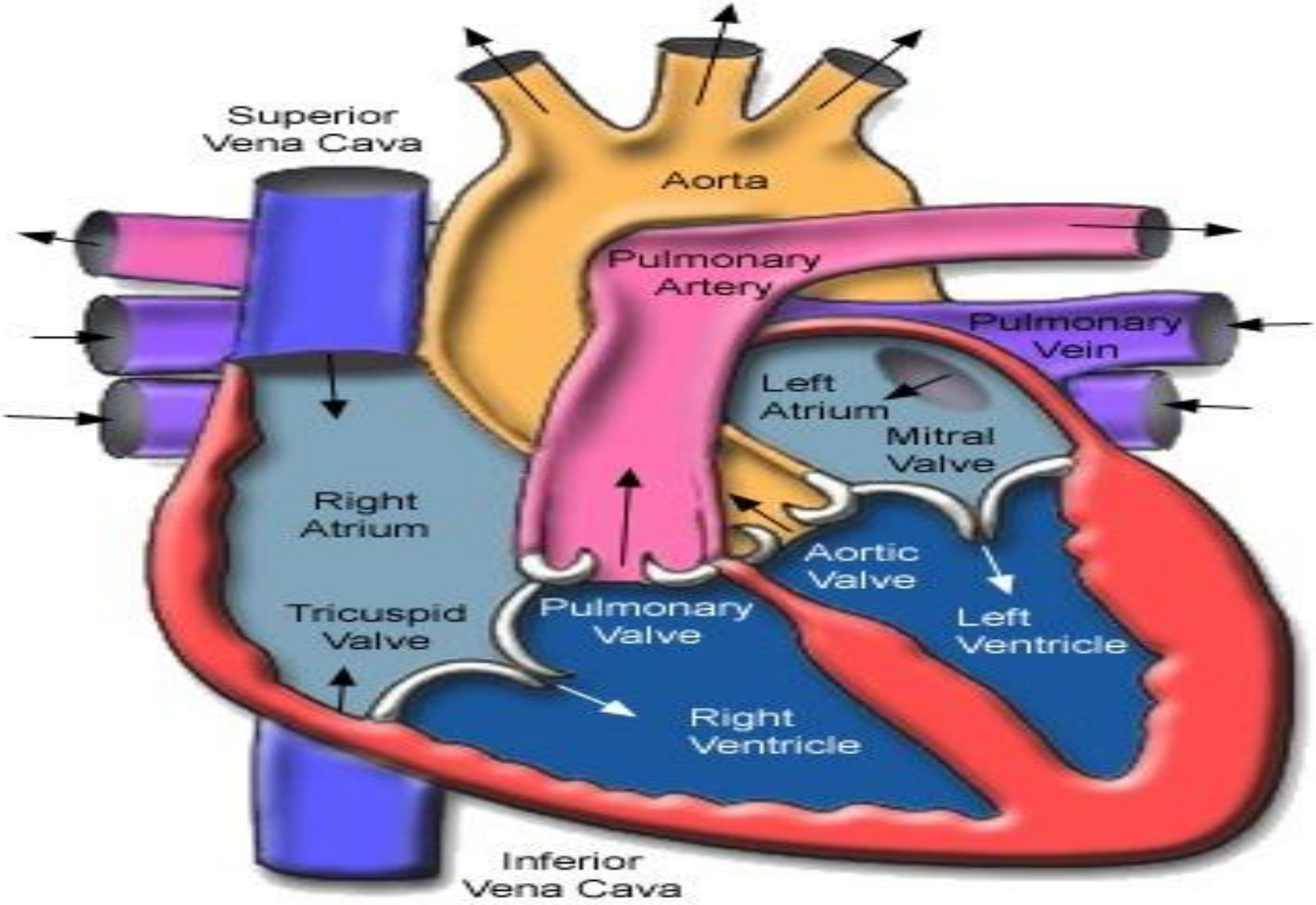

- AROTA:-the main artery of the body, supplying oxygenated blood to the circulatory system. In humans it passes over the heart from the left ventricle and runs down in front of the backbone.
- pulmonary artery:-the artery carrying blood from the right ventricle of the heart to the lungs for oxygenation
- The **pulmonary veins** are large blood vessels that receive oxygenated blood from the lungs and drain into the left atrium of the heart.
- **superior vena cava:-**a large vein carrying deoxygenated blood into the heart. There are two in humans, the *inferior vena cava* (carrying blood from the lower body) and the *superior vena cava* (carrying blood from the head, arms, and upper body).

Heart

A Pulse of Current that Stops Normal Heart Function

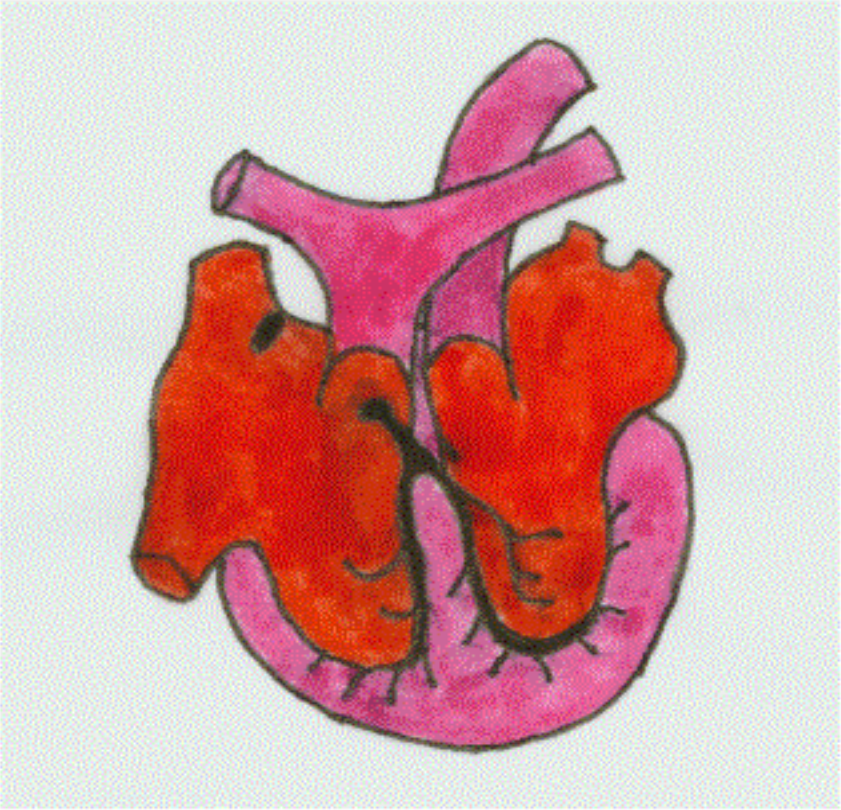

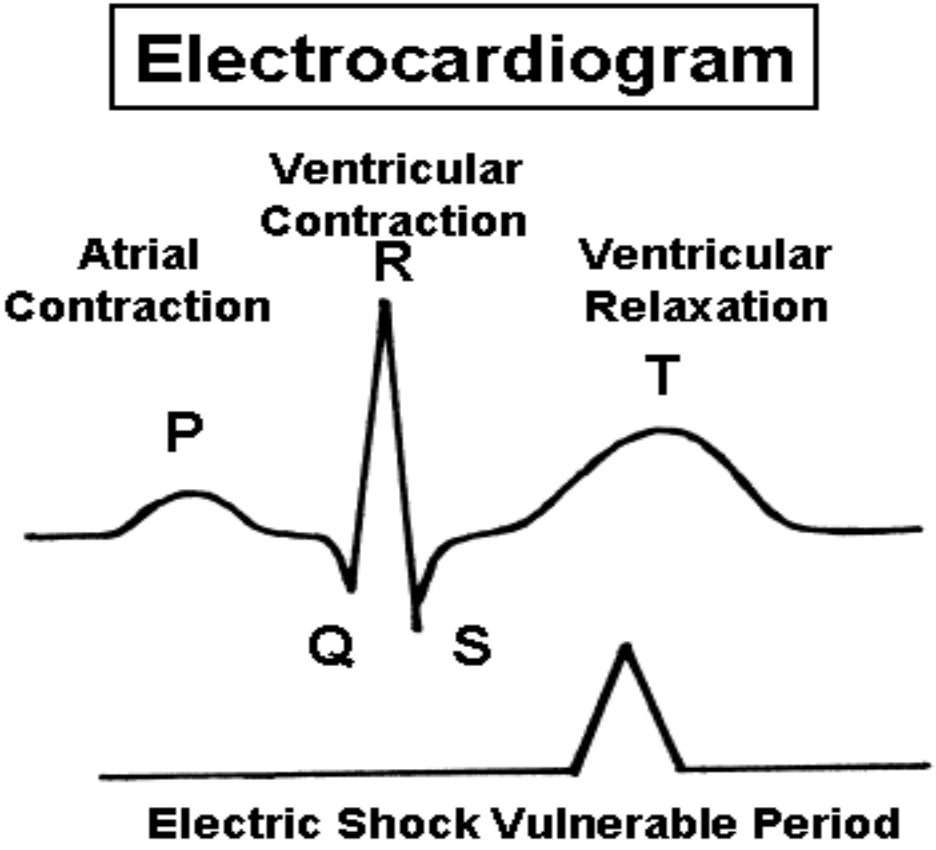

HEART FUNCTION & ELECTRIC SHOCK

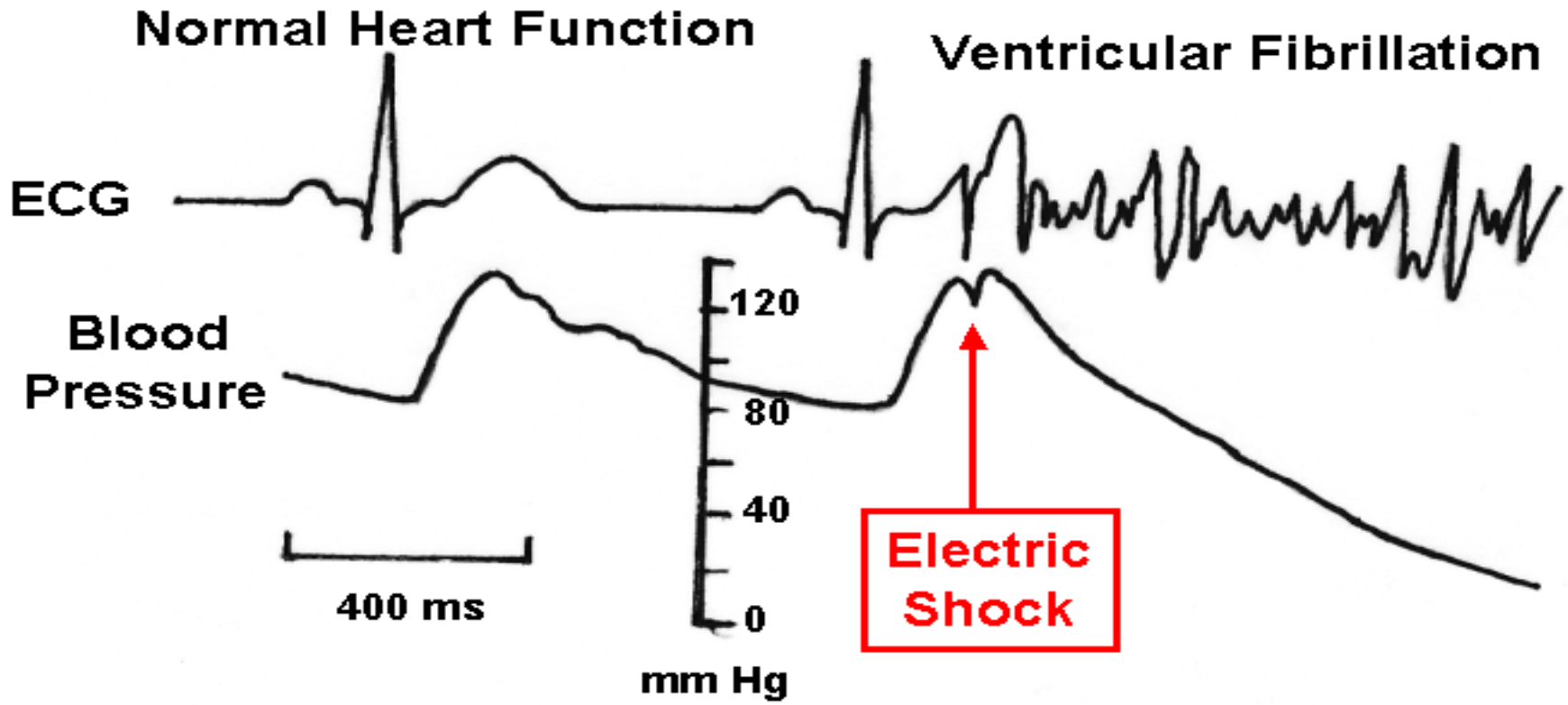

ELECTRIC ENERGY HAZARDS

- *Electric shock.*
- *Electrical arc-flash.*
- *Electrical arc-blast.*

ELECTRIC SHOCK

Electric shock is the sudden stimulation of the body's nervous system by an electric current.

Harmony

एनटीपीसी NTPC

ELECTRIC SHOCK

Physiological Effects of A.C. Current on the Human Body

CURRENT	EFFECTS
1 m A	Barely perceptible
1 - 3 m A	Perception threshold (most cases)
3 - 9 m A	Painful sensations
9 - 25 m A	Muscular contractions (can't let go)
25 - 60 m A	Respiratory paralysis (may be fatal)
60 m A or more	Ventricular fibrillation (probably fatal)
4 A or more	Heart paralysis (fatal)
5 A or more	Tissue burning (fatal if vital organ)

ELECTRIC SHOCK OR ELECTROCUTION

- *Many factors impact the severity of injury resulting from electric shock. These include:*
- *Timing relative to the heart's cycle;*
- *Ground path;*
- *Contact area and pressure;*
- *Body mass;*
- *Environment (Wet Locations).*

Rough estimate of human resistance to electrical current

BODY AREA	ESTIMATED RESISTANCE (ohms)
Dry Skin	100,000 to 600,000
Wet Skin	1000
Internal Body (Hand to Foot)	400 to 600
Ear to Ear	100

Example of electric shock:
Schematic showing the path electric current would take when a frayed wire contacts the case

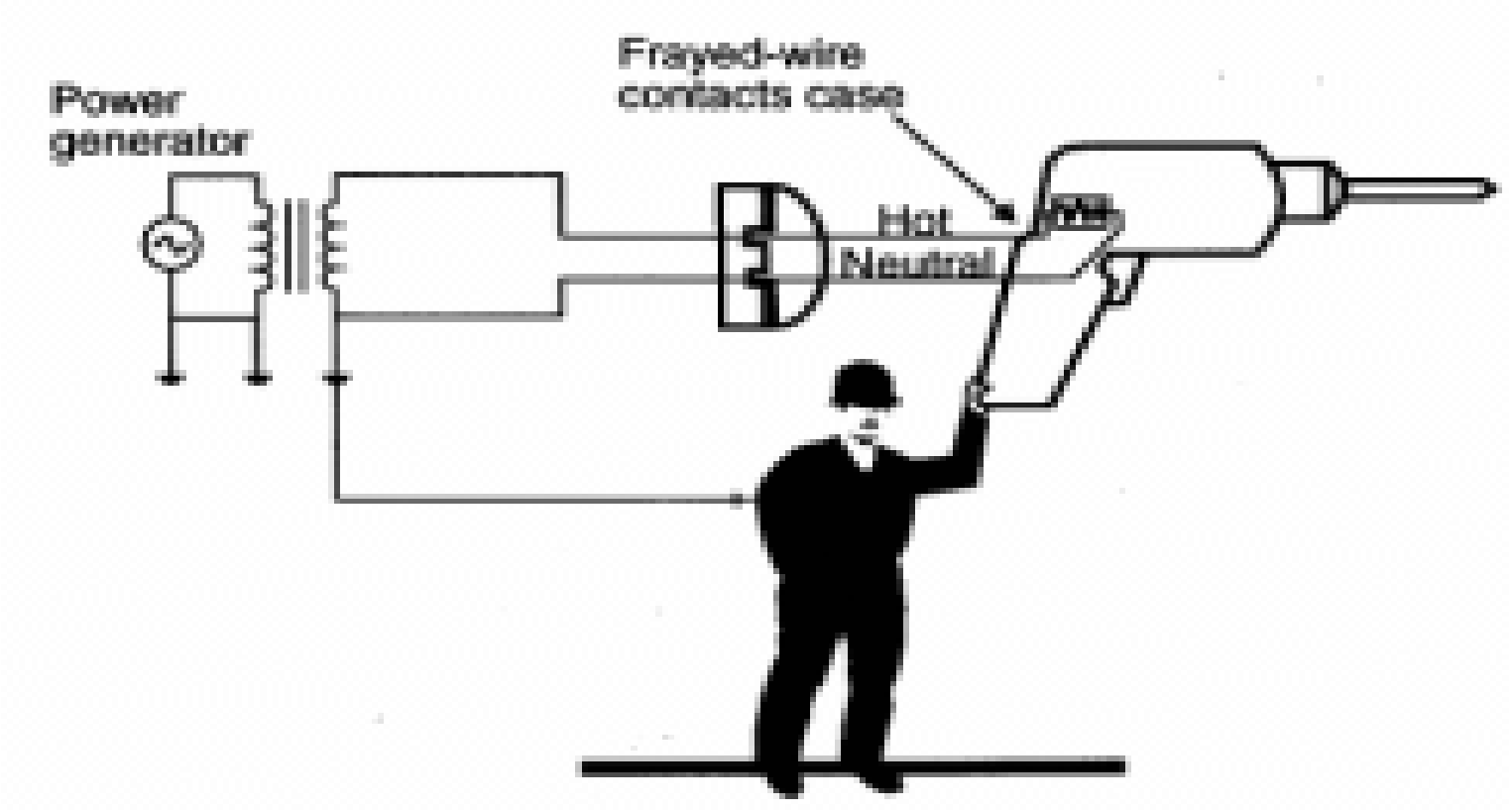

Harmony

एनटीपीसी
NTPC

Harmony

एनटीपीसी
NTPC

CARDIO PULMONARY RESUSCITATION
[ARTIFICIAL VENTILATION]

ELECTRIC ARC-FLASH

- There are two different issues with this hazard, the arc temperature and the incident energy.
- The main concern with the arc temperature is the flash flame and ignition of clothing.
- An approximately 96° C for one tenth of a second, the skin is rendered incurable (a third degree burn).

Harmony

एनटीपीसी
NTPC

Harmony

एनटीपीसी
NTPC

ELECTRIC ARC-BLAST

- The pressures developed by an electric arc can be extremely high. As per one study the copper, when vaporized, expands at a factor of 67,000 times, which is same as produced by dynamite.
- Doors or covers must be securely latched before operating a switch or circuit breaker. Operators must place their body in the safest position possible before operating the equipment.

Harmony

एनटीपीसी
NTPC

Harmony

एनटीपीसी
NTPC

Review Equations

Ohm's Law:

$$V = IR$$

Parallel circuit:

$$R_{eq} = (R_1 R_2) / (R_1 + R_2)$$

Series circuit:

$$R_{eq} = R_1 + R_2$$

Example:

A person cleaning around electrical equipment comes in contact with a 120-volt wire with deteriorated insulation. The worker contacts the wire with his/her hand and is standing on one foot. The worker's hand and foot are wet with cleaning fluid. Assume that $R_{hand} = 1{,}000\Omega$, $R_{body} = 400\Omega$, and $R_{foot} = 1000\Omega$. This is a series circuit so $R_{total} = 2{,}400\Omega$. Current = V/R = 120/2,400 = 0.05 Amps = 50 mA.

How to control the shock hazard

- Insulation
- Interlocks
- Isolation
- Marking / Warning Devices
- Grounding
- Bonding
- Ground fault circuit interrupter (GFCI)

INSULATION

The conductive materials / parts are covered in a non-conductive material.

DOUBLE INSULATION

Using two layers of insulation with no conductive materials passing through the layers.

WAYS INSULATION MAY FAIL

- Mechanical stress, as with friction, can cause tearing & crushing.
- Excessive electrical stress can occur when equipment experiences voltages significantly beyond the levels for which it was designed.
- Temperature, either excessively high or low, or temperature cycling can cause differential expansion or contraction of a material.
- Chemical and physical reactions, such as oxidation, contamination, or leaching of important gradients.

INTERLOCKS

Involve the use of an enclosure. If the enclosure is opened the system is de-energized.

ISOLATION

The use of enclosure or barriers to keep people away.

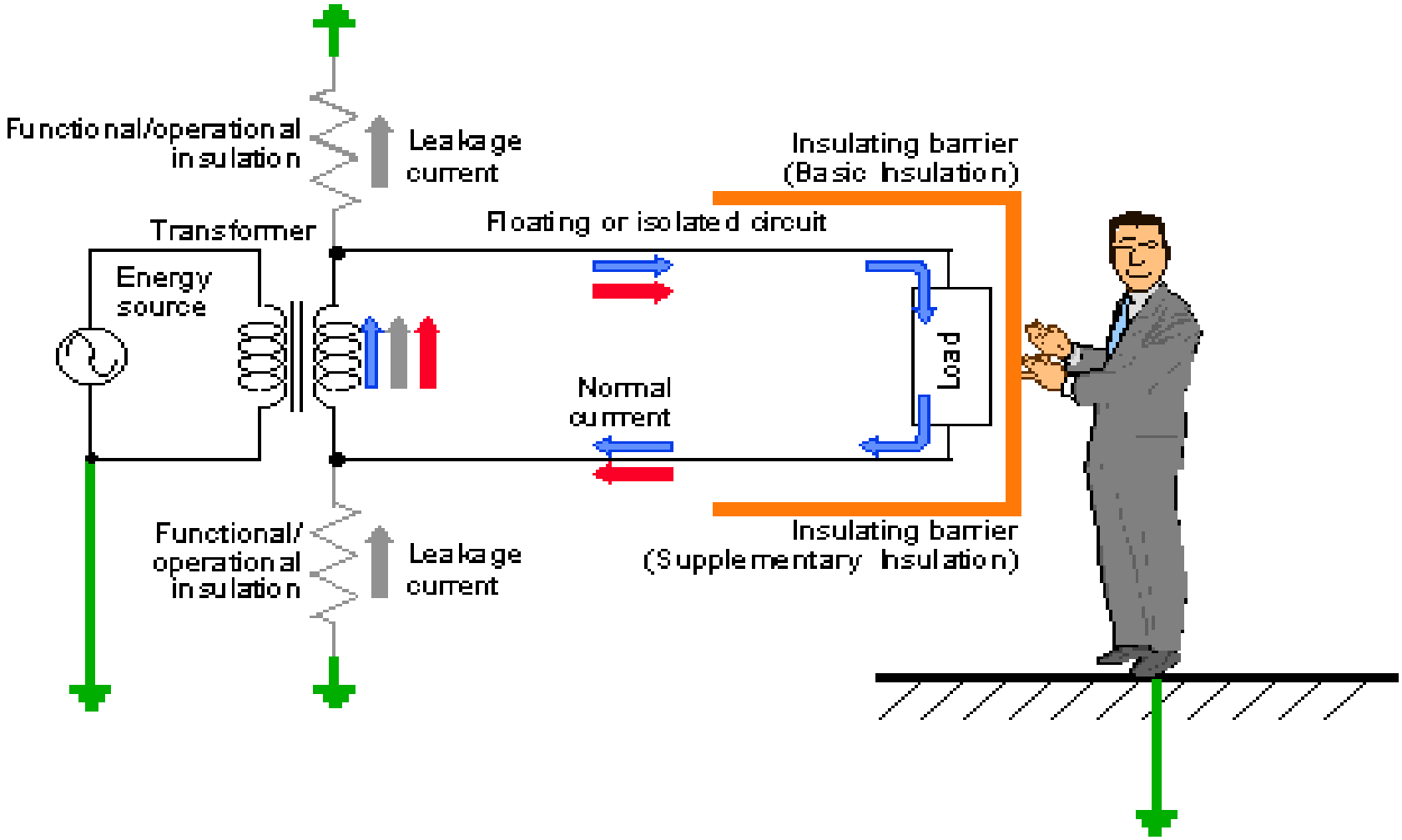
Functional/operational insulation
Leakage current
Insulating barrier (Basic Insulation)
Transformer
Floating or isolated circuit
Energy source
Load
Normal current
Functional/ operational insulation
Leakage current
Insulating barrier (Supplementary Insulation)

Figure 4

MARKING / WARNING DEVICES

The use of signs, lights and sound to indicate a dangerous situation.

GROUNDING

Providing a low resistance path to ground for the electric current, so that it will not flow through human body.

BONDING

It is a form of grounding. All major system parts are connected to ground. It is usually used to prevent the build up of static electricity.

GROUND FAULT CIRCUIT INTERRUPTER

GFCI

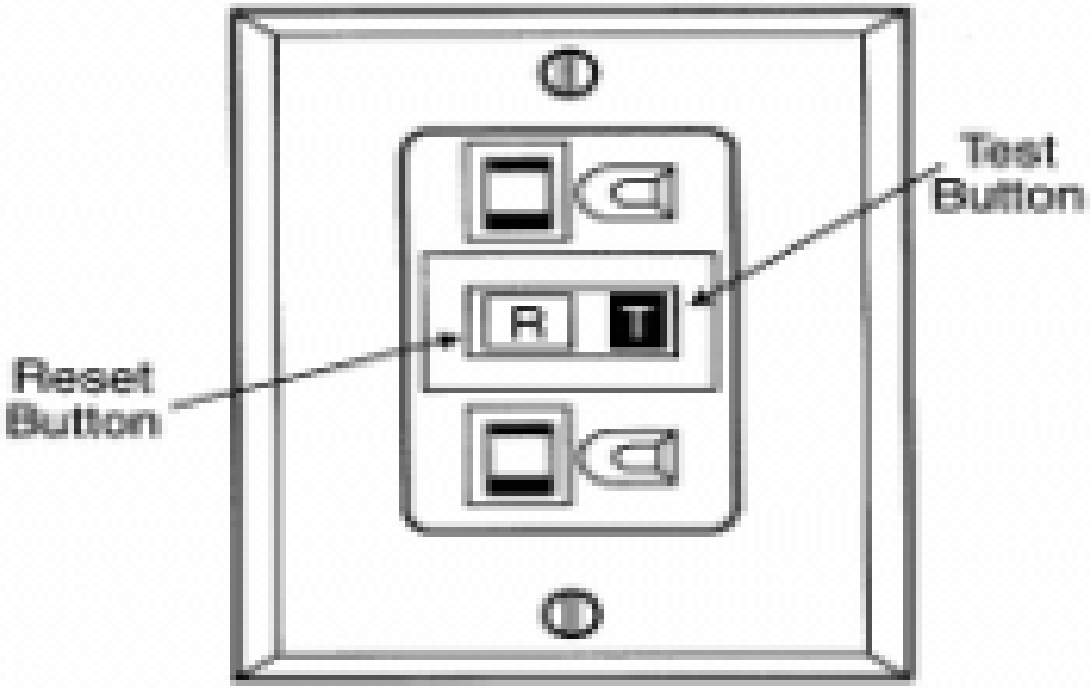

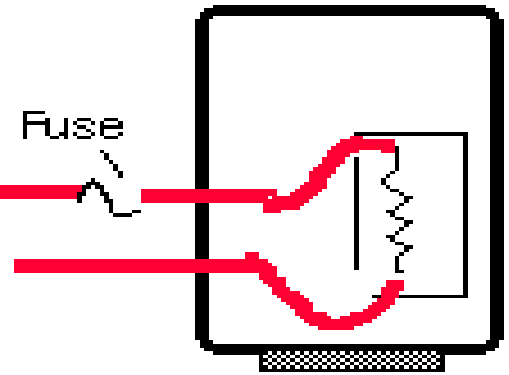
Fuse

a.

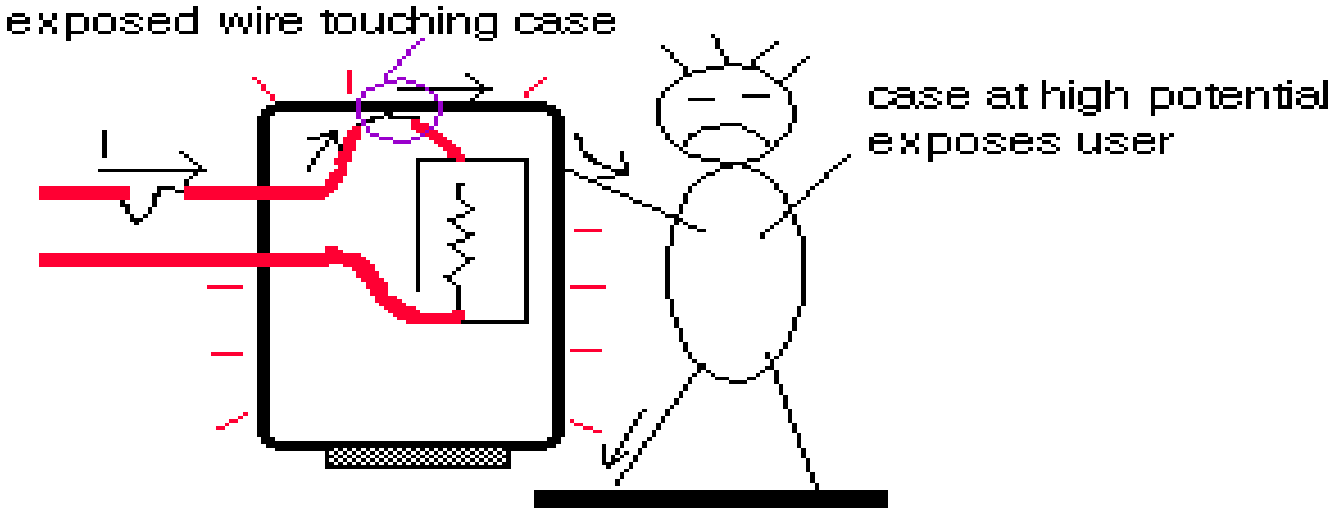
exposed wire touching case
I
case at high potential
exposes user

b.

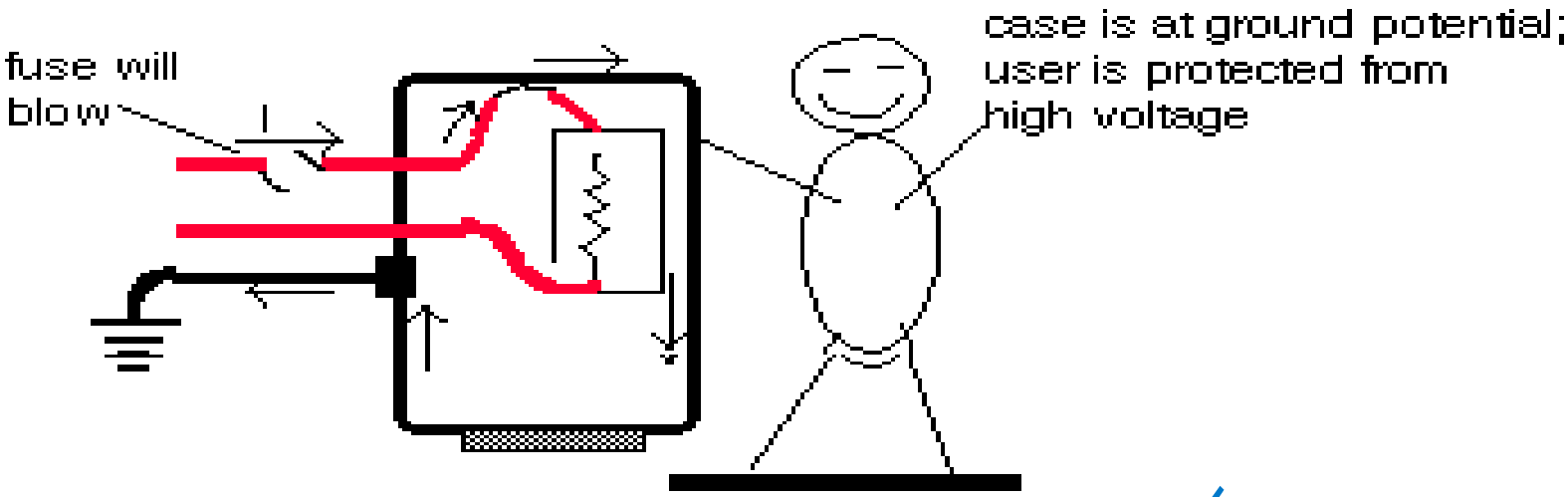
fuse will
blow
I
case is at ground potential;
user is protected from
high voltage

c.

Harmony

एनटीपीसी NTPC

Circuit Breakers and Human Protection

220VAC Source Protected by a 15A Circuit Breaker

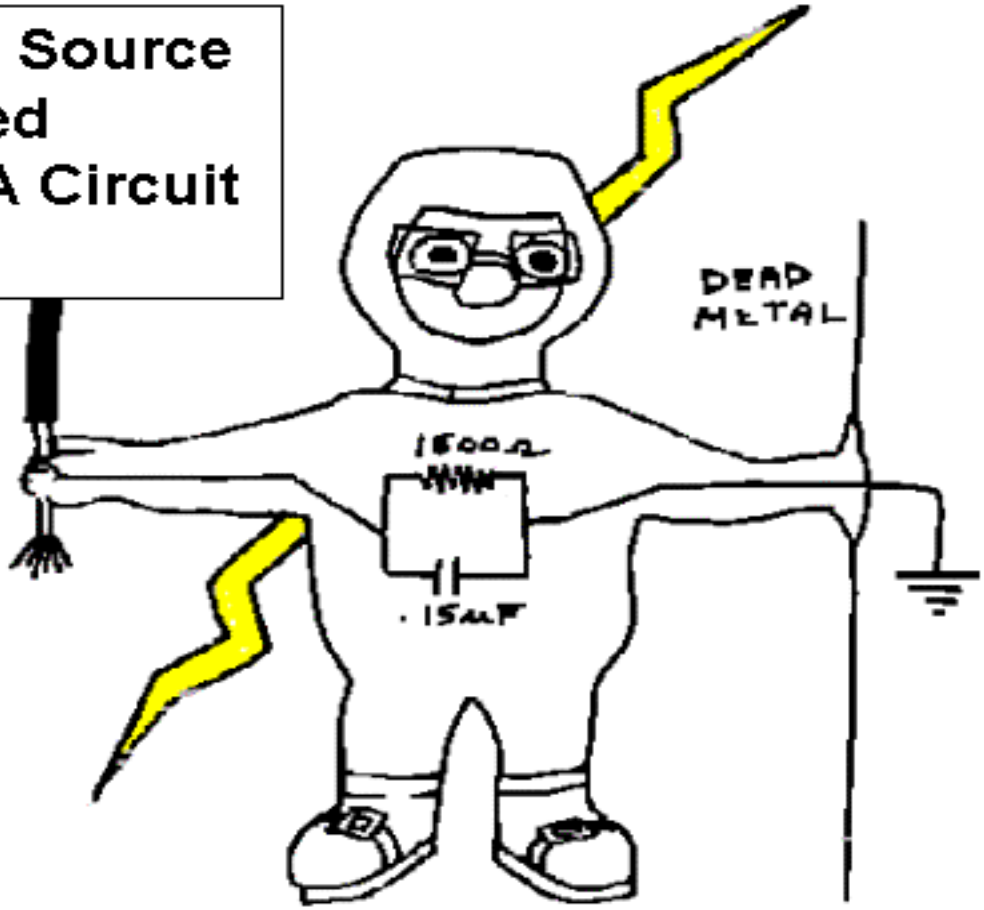

Poor Connection Example – Functioning as Designed

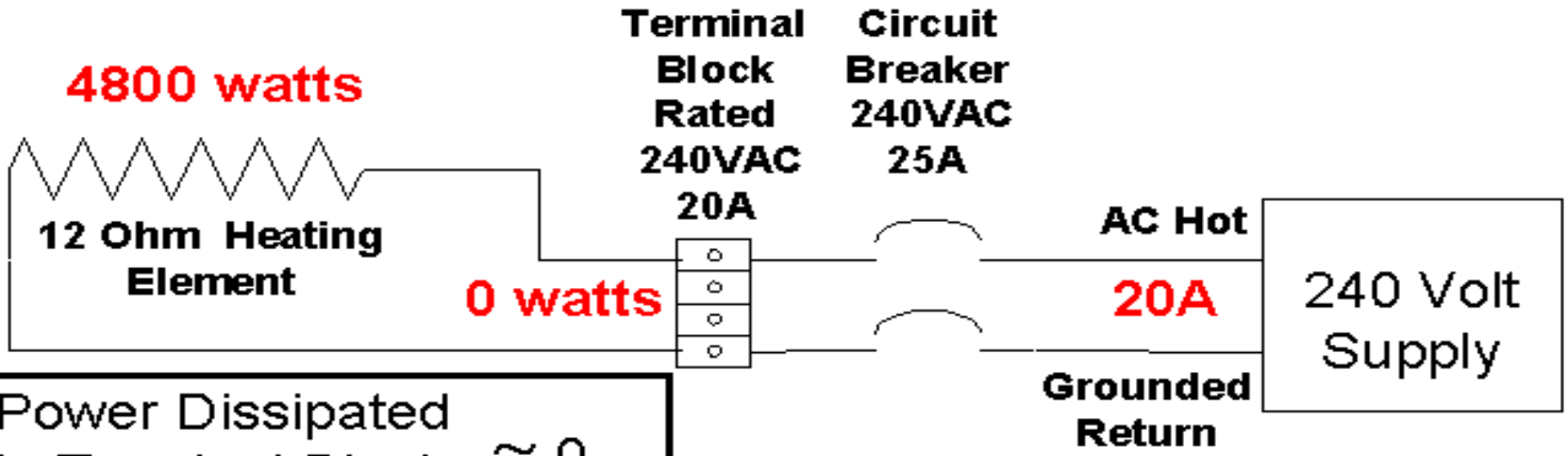

Power Dissipated in Terminal Block ≈ 0

Current = 20A = $\frac{240}{12}$

Voltage Drop Each Heating Element 240V = 12 x 20

Power Dissipated in the Heater = 4800 watts = 240 x 20

Poor Connection Example – Loose Connection

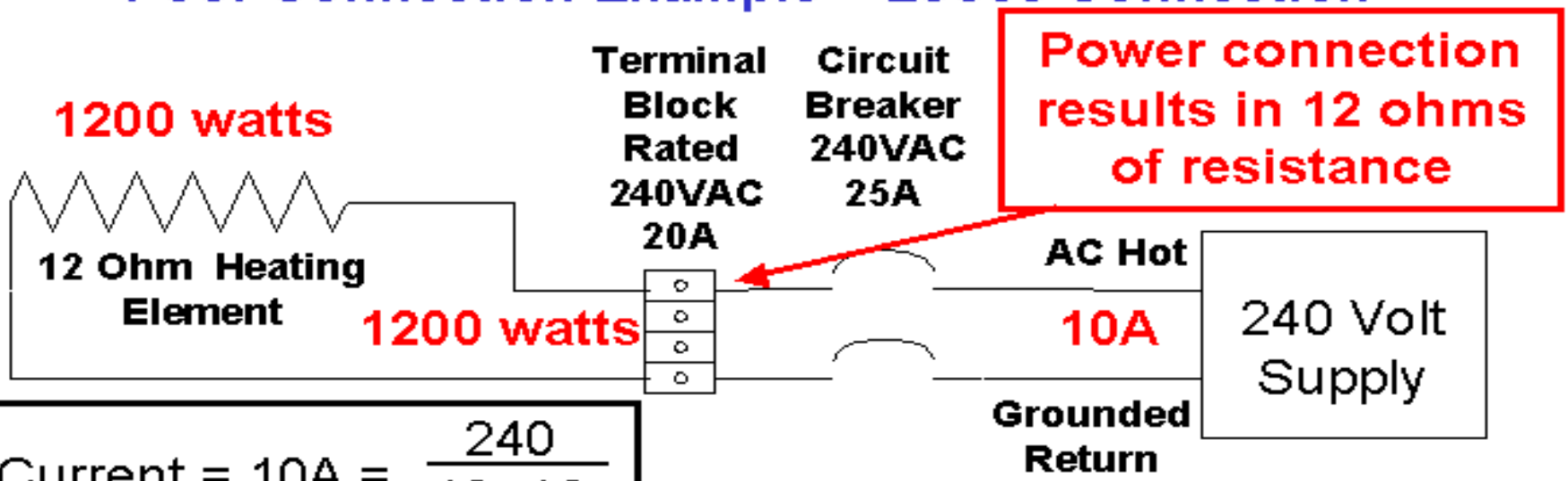

$$\text{Current} = 10\text{A} = \frac{240}{12+12}$$

Voltage Drop On The Terminal Block = Voltage Drop Heating Element

120V = 12 x 10

Heater Power = Terminal Block Power = 1200 watts = 120 x 10

Simple Overload Example - Before A Fault

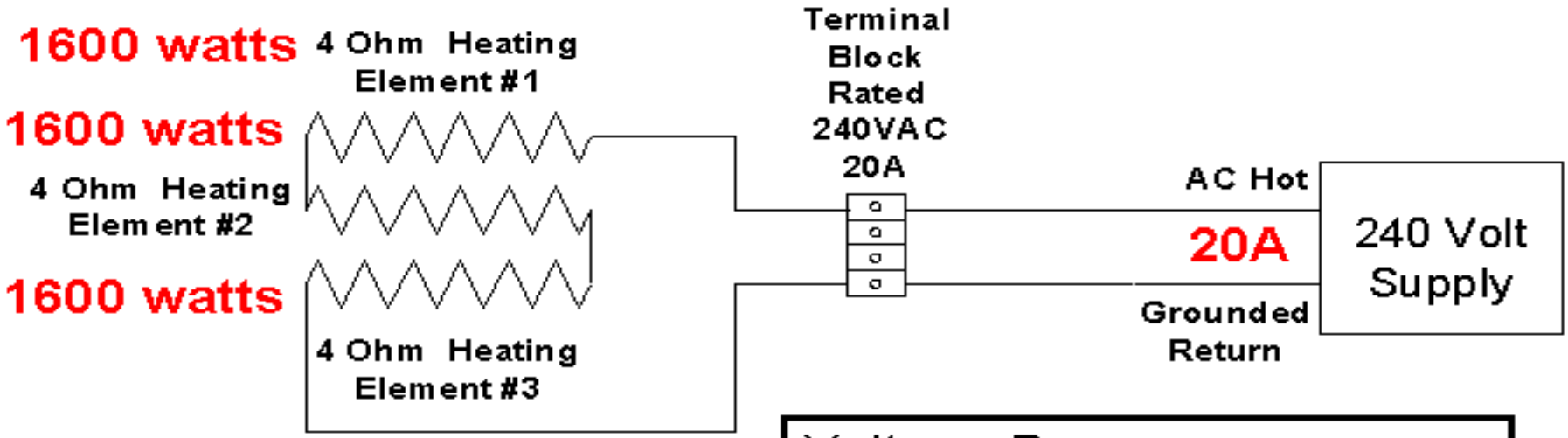

Current = 20A = $\frac{240}{4+4+4}$

Voltage Drop Each Heating Element 80V = 4 x 20

Power Dissipated in Each Heater = 1600 watts = 80 x 20

Harmony

एनटीपीसी NTPC

Simple Overload Example - After A Fault

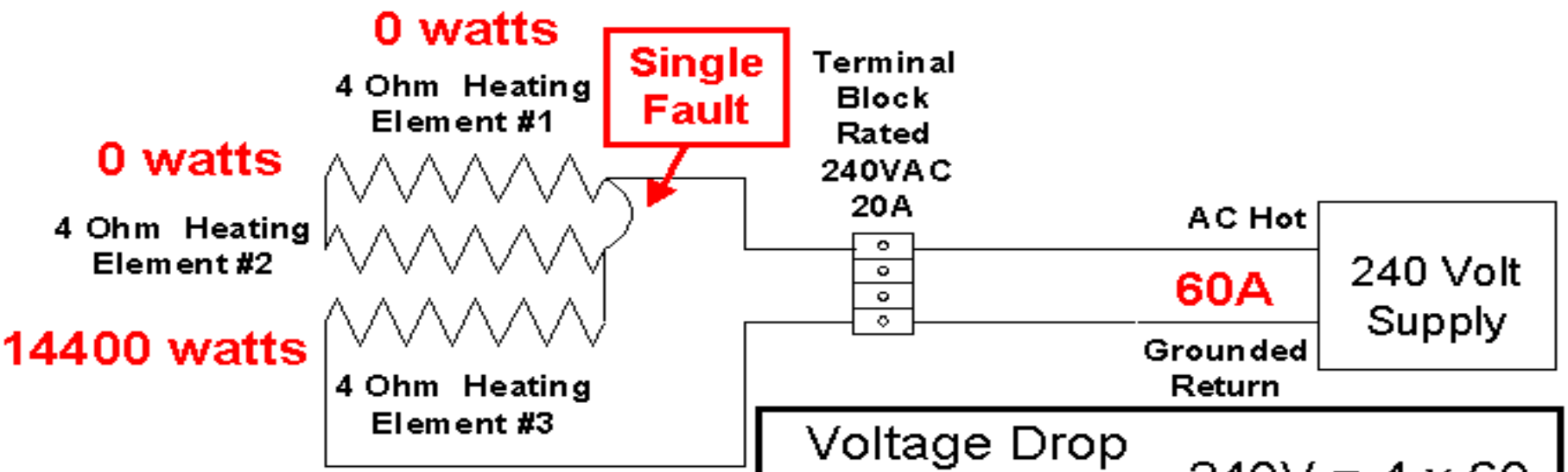

Voltage Drop Heater #3 240V = 4 x 60

Current = 60A = $\frac{240}{4}$

Power Dissipated Heater #3 = 14400 watts = 240 x 60

Simple Overload Example - Solution

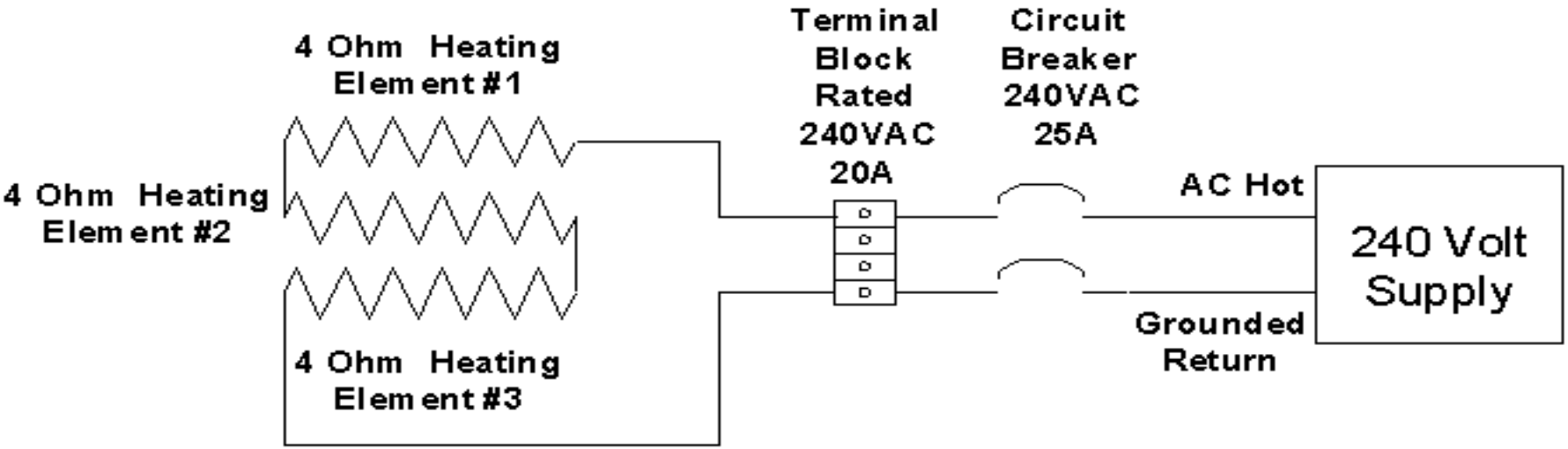

Size the over current protection for the overall equipment, its subsystems and components to protect against overload conditions.

Harmony

एनटीपीसी NTPC

Loss of Heat Sink Example
Heated Chemical Bath – Before Fault

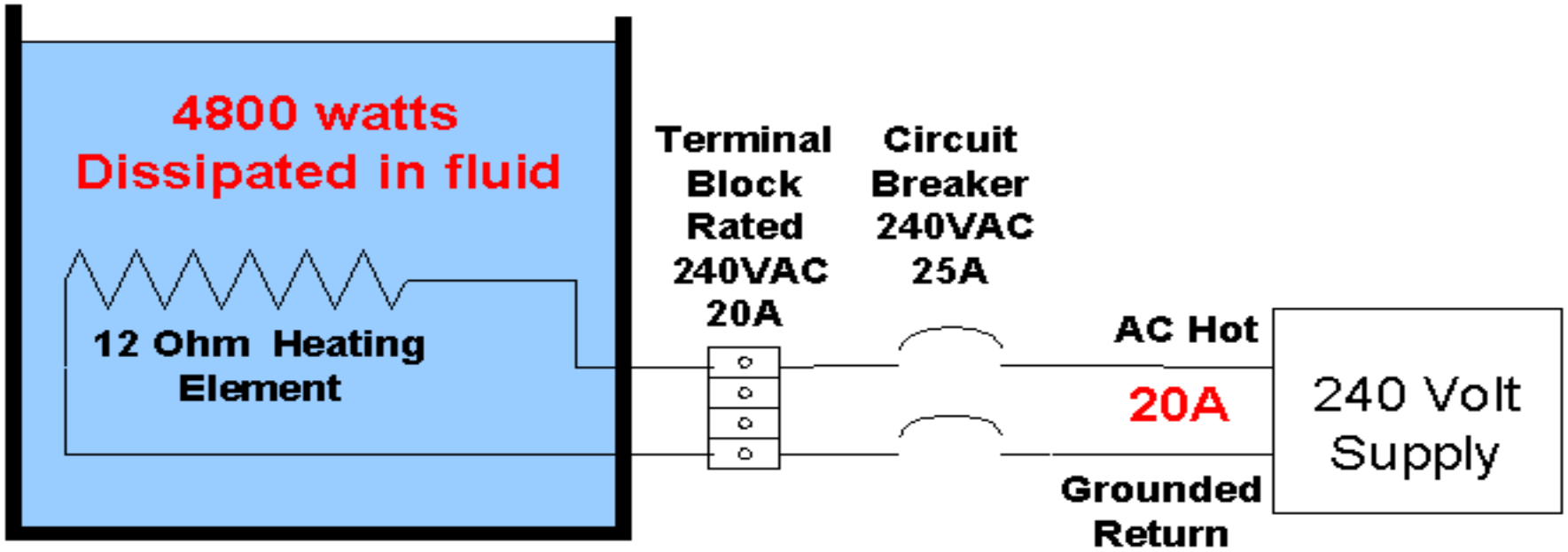

The fluid is essential, not only for process, but for heat removal and safe operation of the system.

Harmony

एनटीपीसी NTPC

Loss of Heat Sink Example
Heated Chemical Bath – After Fault

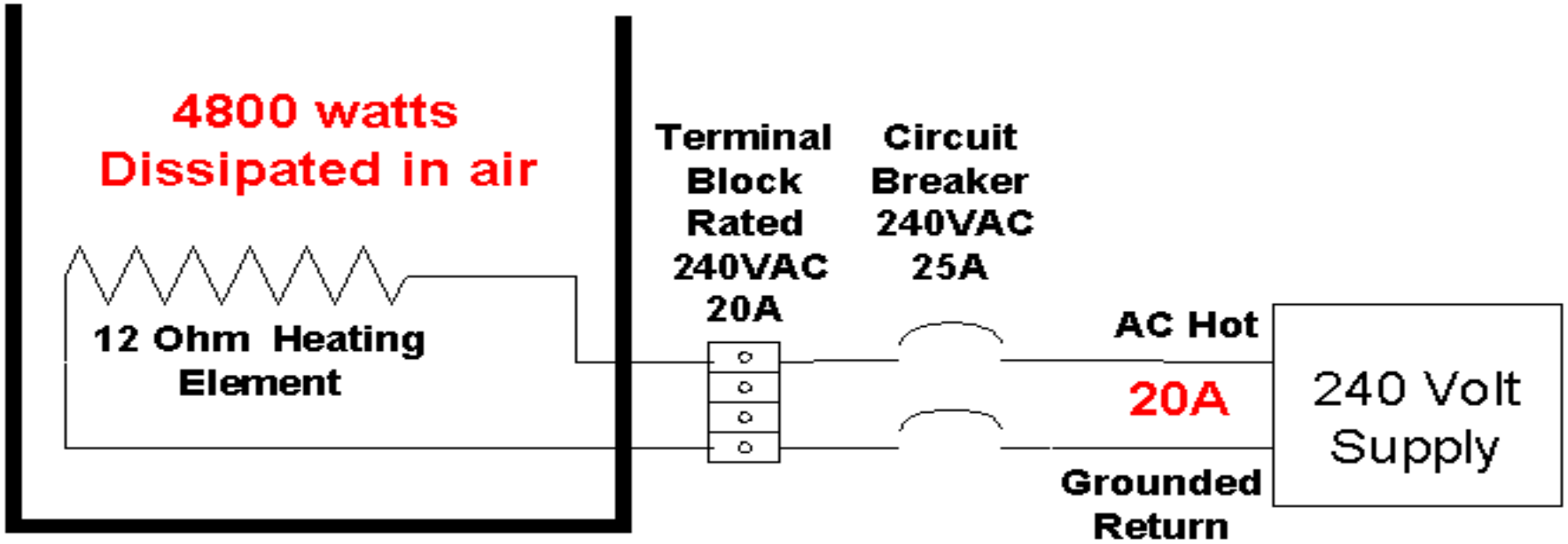

The loss of the heat sink effect of the liquid will often result in a significant fire risk.

Harmony

Anatomy of an Arc

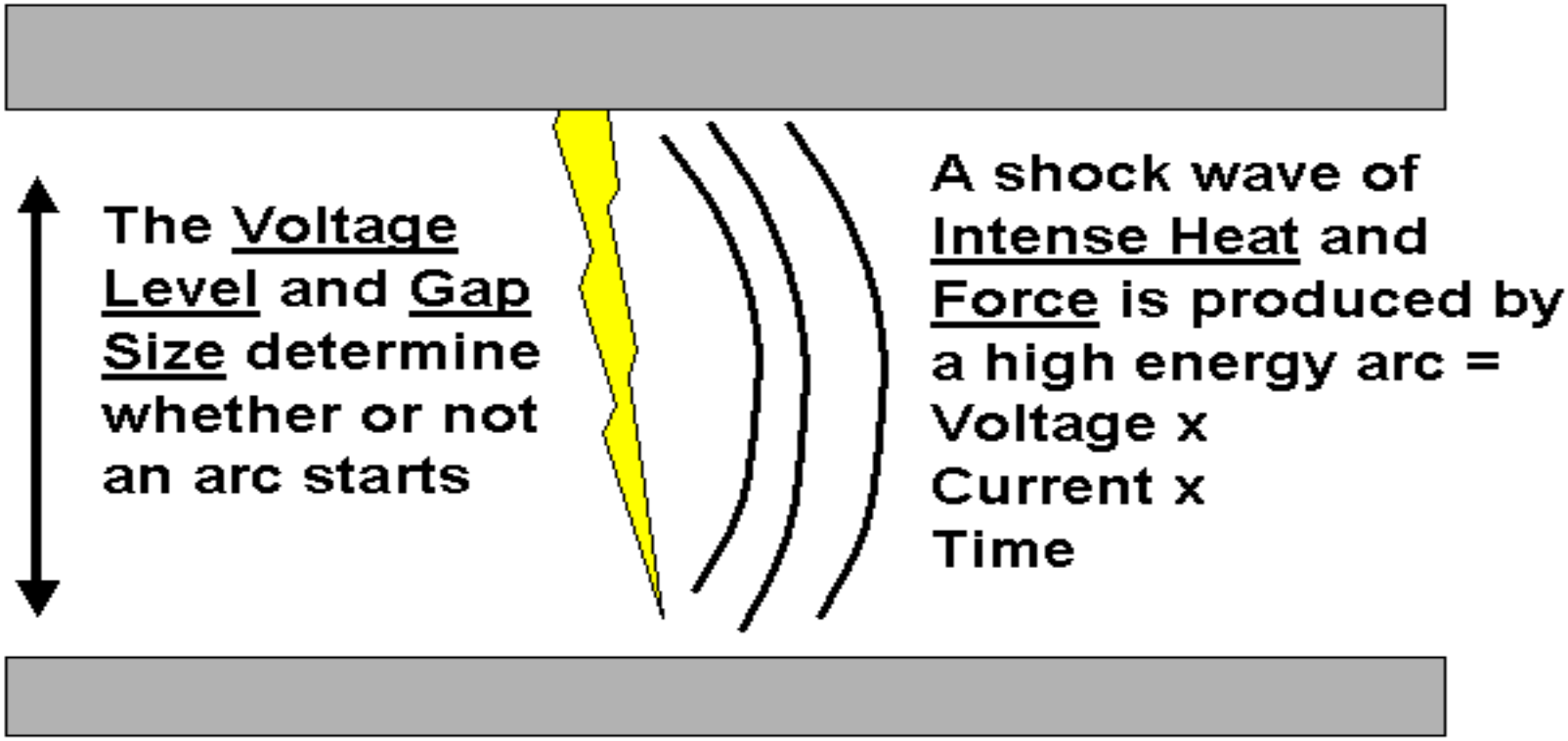

Injury Caused by Radiated Heat and Force

Harmony

एनटीपीसी NTPC

Conducting an Arc Flash Study

Arc Flash Calculation Flow

1. Determine Bolt Current
   This requires a classic fault current study

2. Determine Arc Current
   Largely a function of bolt current

3. Determine Incident Energy
   Largely a function of arc current and arc duration

4. Determine Flash Protection Boundary
   A function of incident energy

The steps are based on complex equations and multiple variables

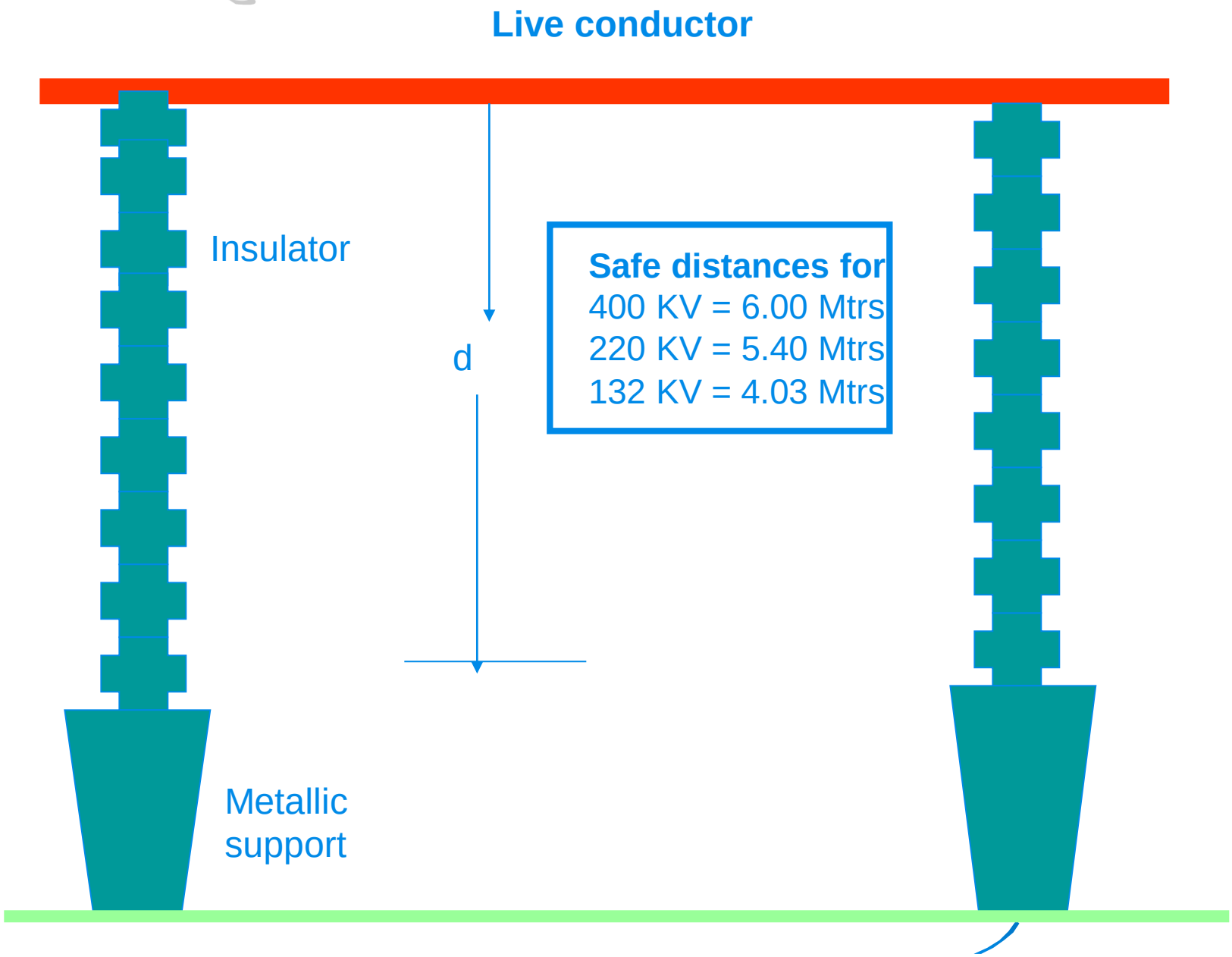
Live conductor
Insulator
d
Safe distances for
400 KV = 6.00 Mtrs
220 KV = 5.40 Mtrs
132 KV = 4.03 Mtrs
Metallic
support

Washing live high voltage insulators

- Precautions to taken during hot line water washing
- The equipment must have a nozzle such that water ejected by it breaks into a spray immediately and definitely before reaching the insulator being washed.
- The nozzle and the metal part of the equipment must be boned together and to earth by a suitable earthing lead which is not less than 65 sq mm copper equivalent in cross section.
- The conductivity of the water must not exceed 200 micro siemens per cm at 25 deg c on 220 kv system
- The equipment operator and supervisor must not be less than 6 m away from the insulator being washed and care must be taken that

1. No other live conductor at a lesser distance is inadvertently sprayed.
2. Not more than one phase is washed by same jet.
3. No two insulators less that 6 m apart which are at different potential are washed by the same jet.

- Water washing must be discontinued in the event of a local lightening risk.

5 minute safety training aid

- Never stand on wet or damp surfaces
- Never use tools with defective or broken insulation;
- Check for improper or faulty connections .
- Replace broken or defective plugs
- Avoid using broken and loose switches.
- Never use sparking brushes.
- Never attempt to repair a tool while it is plugged in.
- Never use tools around flammable vapors or gases unless they specifically designed for that purpose.

Harmony

एनटीपीसी NTPC

NFPA 70E Table - Approach Boundaries to Live Parts for Shock Protection

(All dimensions are distance from live parts to employee)

(1)	(2)	(3)	(4)	(5)
Nominal System Voltage Range, Phase to Phase	Limited Approach Boundary		Restricted Approach Boundary; Includes Inadvertent Movement Adder	Prohibited Approach Boundary
	Exposed Movable Conductor	Exposed Fixed Circuit Part		
0 to 50	Not Specified	Not Specified	Not Specified	Not Specified
51 to 300	10 ft 0 in.	3 ft 6 in.	Avoid contact	Avoid contact
301 to 750	10 ft 0 in.	3 ft 6 in.	1 ft 0 in.	0 ft 1 in.
751 to 15 kV	10 ft 0 in.	5 ft 0 in.	2 ft 2 in.	0 ft 7 in.
15.1kV to 36kV	10 ft 0 in.	6 ft 0 in.	2 ft 7 in.	0 ft 10 in.
36.1kV to 46 kV	10 ft 0 in.	8 ft 0 in.	2 ft 9 in.	1 ft 5 in.
46.1kV to 72.5kV	10 ft 0 in.	8 ft 0 in.	3 ft 3 in.	2 ft 1 in.
72.6kV to 121kV	10 ft 8 in.	8 ft 0 in.	3 ft 5 in.	2 ft 8 in.
138kV to 145kV	11 ft 0 in.	10 ft 0 in.	3 ft 7 in.	3 ft 1 in.
161kV to 169kV	11 ft 8 in.	11 ft 8 in.	4 ft 0 in.	3 ft 6 in.
230kV to 242kV	13 ft 0 in.	13 ft 0 in.	5 ft 3 in.	4 ft 9 in.
345kV to 362kV	15 ft 4 in.	15 ft 4 in.	8 ft 6 in.	8 ft 0 in.
500kV to 550kV	19 ft 0 in.	19 ft 0 in.	11 ft 3 in.	10 ft 9 in.
765kV to 800kV	23 ft 9 in.	23 ft 9 in.	14 ft 11 in.	14 ft 5 in

Harmony

The following slides will discuss specific electrical hazards the non-electrical skilled worker is exposed to in the work place and the methods used to mitigate the hazards.

Hazards of Electricity

Shock

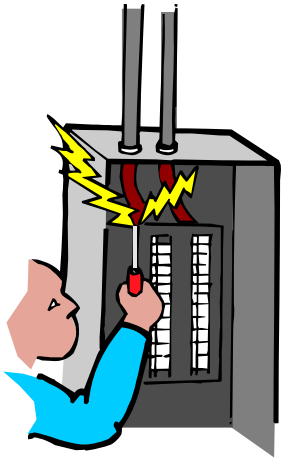

Arc

Blast

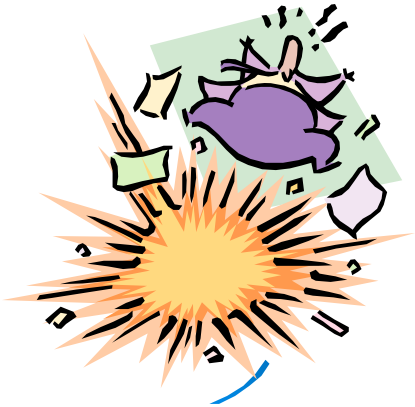

The most effective way to protect against electrical hazards is to use LO/TO.

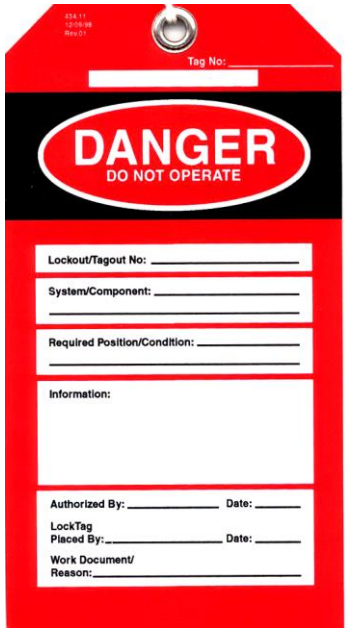

- Your facility will have specific requirements for LO/TO. Always comply with the requirements.
- Only LO/TO qualified employees may work under the protection of a LO/TO.
- LO/TO accomplishes a zero energy state and there is no electrical hazard.
- You are required to comply with all LO/TO requirements.
- ***Failure to comply can result in injury or death!***

DO NOT OPERATE!

Lockout/Tagout

- Your personal lock and personal danger tag is what protects you from systems being re-energized while you are working on them.
- You are the only person authorized to remove them except under specially controlled conditions.
- **If you don't install them, you are not protected!**

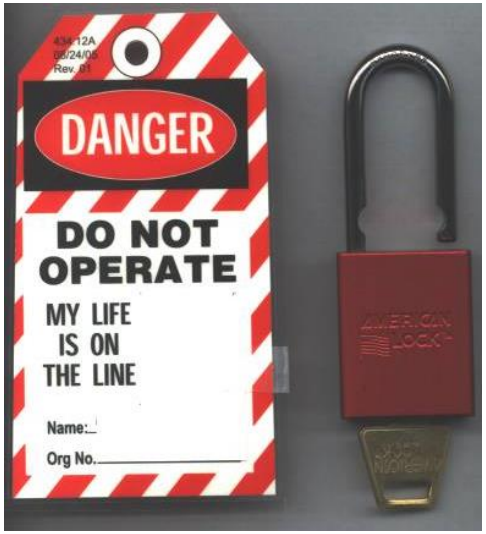

Harmony

एनटीपीसी NTPC

A Ground Fault Circuit Interrupter (GFCI) is a very effective device to protect employees in the work place from electrical shock.

- The number of deaths from electrical shock in the work place has been cut in half since GFCIs have been introduced.
- GFCIs are required for all maintenance activities.
- GFCIs protect you from electrical shock by tripping on current leakage to ground, which may be through you.
- Plugging one GFCI into another one does not create a hazard. The most sensitive one will trip first.
- GFCIs may be permanently installed in the facility or a portable device. – Use them.

Use of Specific Safety-Related Equipment and Work Practices

GFCIs

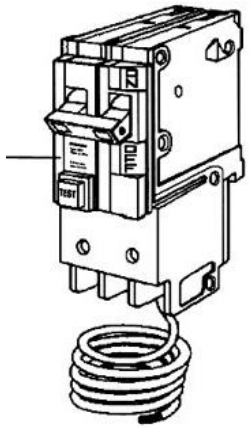

- Ground Fault Circuit Interrupters (GFCIs) are required for all 125-volt, single phase, 15 and 20-ampere receptacle outlets used for temporary electric power, or as an extension to the power supply cord.
- Test Before Use. Push the test button and verify the GFCI has shut off by plugging a safe device into it (i.e. portable lamp or tool). If it doesn't shut off, don't use it. Reset it. If it turns on, it is safe to use.
- Report a malfunctioning GFCI to the designated facility organization.

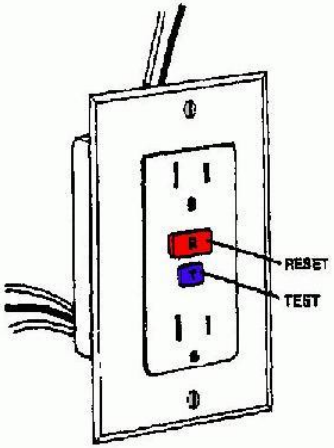

RECEPTACLE TYPE GFCI

GFCIs

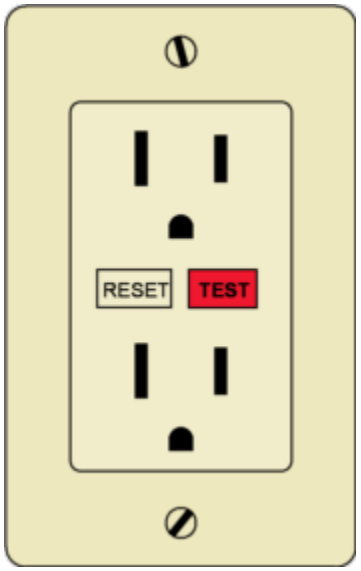

- Most facilities will allow resetting the GFCI one time. Verify with your facility.
- If it trips a second time, have it evaluated by a qualified electrical worker.
- It may have tripped to save your life!
- Repeated resetting is not allowed.

Circuit Breaker Tripping

Anytime a circuit has been de-energized by the operation of an over current protective device (such as a fuse or circuit breaker) by a short circuit or ground-fault, the circuit must be checked by a qualified person to determine if it can be reenergized safely.

The repetitive manual re-closing of circuit breakers or reenergizing circuits through replacing fuses is prohibited.

Circuit Breaker Tripping

- If you are allowed to reset circuit breakers or other electrical switches, position yourself in the safest location possible.
- Never stand directly in front of or reach across the device.

- Some facilities have specific requirements for who is allowed to operate breakers and disconnects. Make sure you know the requirement before performing these actions.

Harmony

Moisture provides a conductive path that could result in death.

Never work with wet tools or clothing.

Remove Your Jewelry.

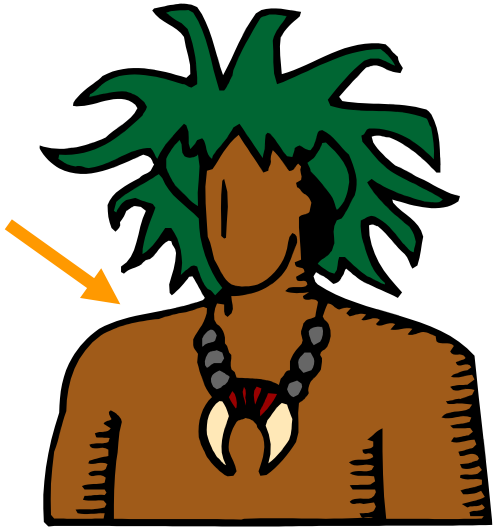

Use of Specific Safety-Related Equipment and Work Practices

Portable Electric Equipment and Flexible Cord Set requirements:

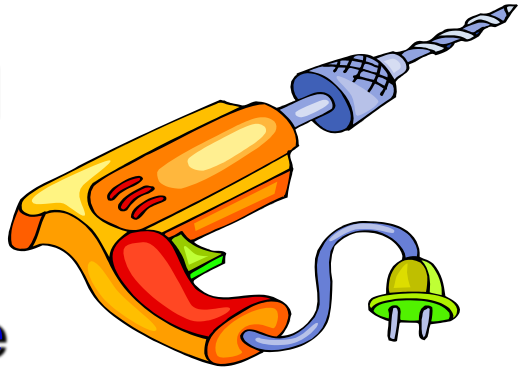

- The user must visually inspect the equipment for defects and damage before they are used on any shift.
- If the tool or cord set is damaged, take it out of service or have it repaired.

Portable Electric Tools - Things to look for:

Damaged/Broken case

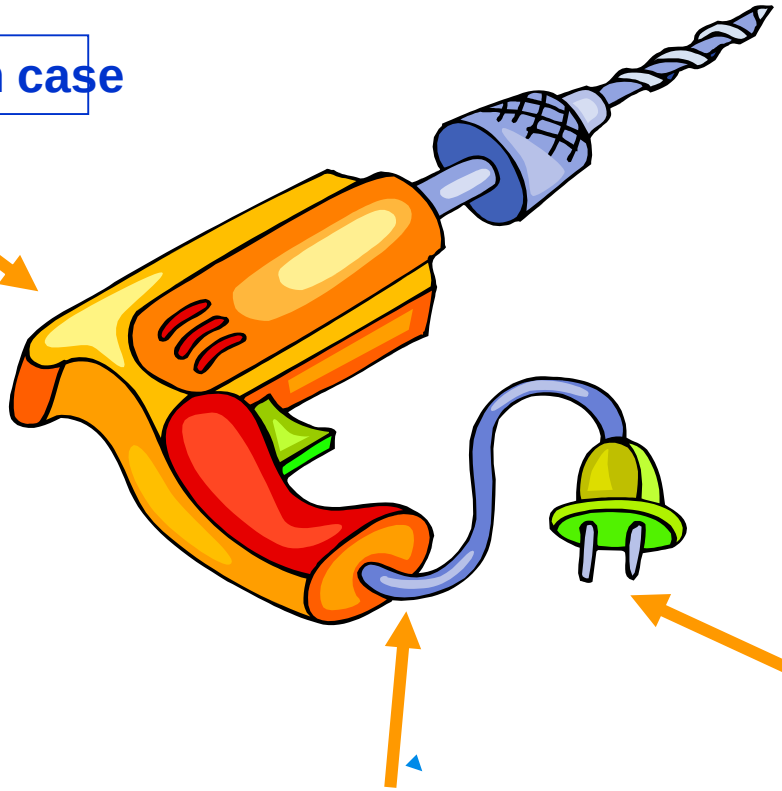

Damaged Cord – outer sheath broken

Ground prong missing on three-prong plugs. Some tools are double insulated and won't have a ground prong. That's OK.

1

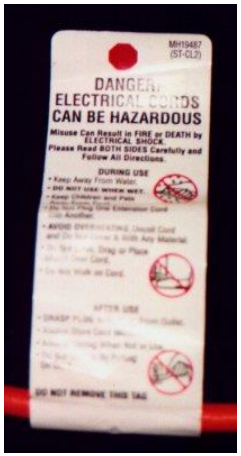

2

3

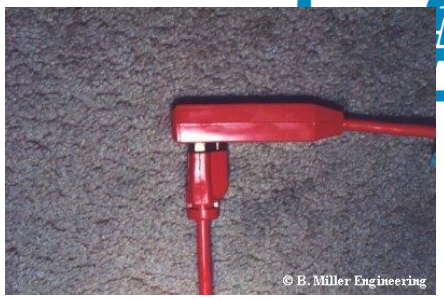

4

Cords – Items to consider before use.

1. Use as per Listing and Labeling
2. Inner wires exposed – Don't use.
3. Plug not fully seated – Don't use.
4. Cords run through doors / pinch points – Don't use.
5. Outer sheath damaged – Don't use.
6. Cord tightly coiled may cause a problem – Don't use.
7. Tightly coiled cord that had a meltdown because it couldn't cool properly when overloaded.
8. Cords must be GFCI protected or under an Assured Equipment Ground Conductor program.

5

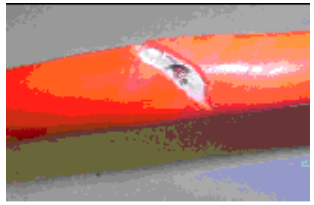

8

7

6

Harmony

Extension cords should be a minimum of 16 AWG and be rated for the equipment in use. The following is a guide that might be helpful in selecting the cord:

Extension Cord Ampere Rating		
Wire Size (Copper)	Single Phase Two and Three Conductor Cords	Three Phase Cords
16AWG	13 amps	10 amps
14AWG	18 amps	15 amps
12AWG	25 amps	20 amps
10AWG	30 amps	25 amps
8AWG	40 amps	35 amps
6AWG	55 amps	45 amps
4AWG	70 amps	60 amps
2AWG	95 amps	80 amps

RECOMMENDED WIRE SIZE MAXIMUM LENGTH

AWG #16 — 25 Feet

AWG #14 — 50 Feet

AWG #12 — 75 Feet

AWG #10 — 100 Feet

Harmony

Extension cords shall:

- Be protected from physical damage at all times.
- Be inspected before use.
- Be routed so trip, pinch, abrasion, snagging, etc. cannot occur.
- Not be used as a substitute for permanent wiring.
- Be suitable for the environment i.e. outside, wet, sunlight, etc.
- Shall have slack – not drawn out tight.
- Shall be unplugged by grasping the plug not the cord.

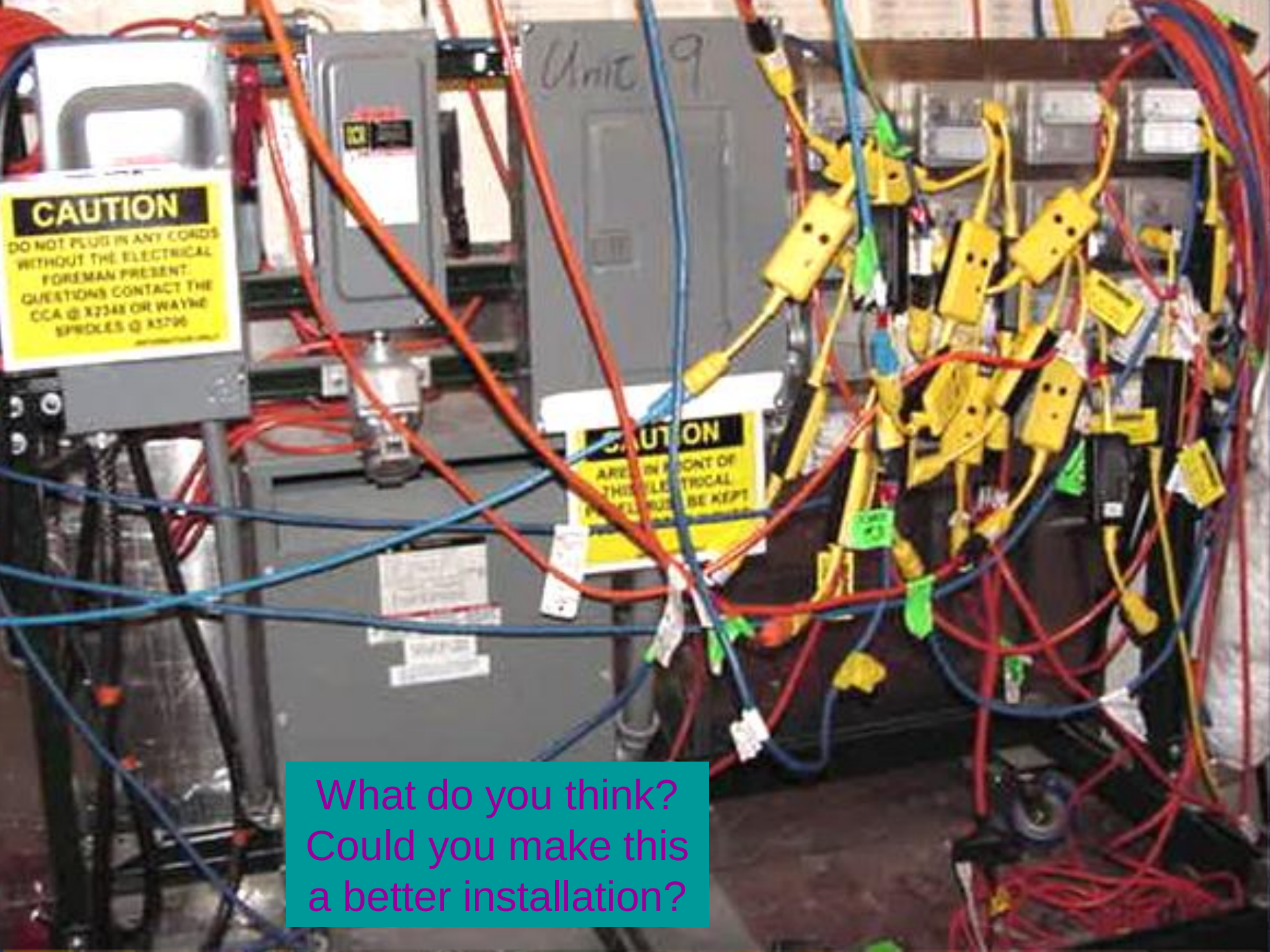

What do you think?
Could you make this
a better installation?

Ladders used around electrical hazards must have non-conductive side rails.
Ladders with non-conductive side rails that are contaminated with paint, greases or other coatings may no longer be non-conductive. Check them out.

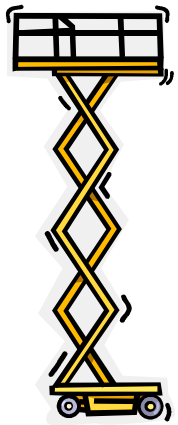

Stay away from exposed energized equipment.

Always look up before you lift or climb up.

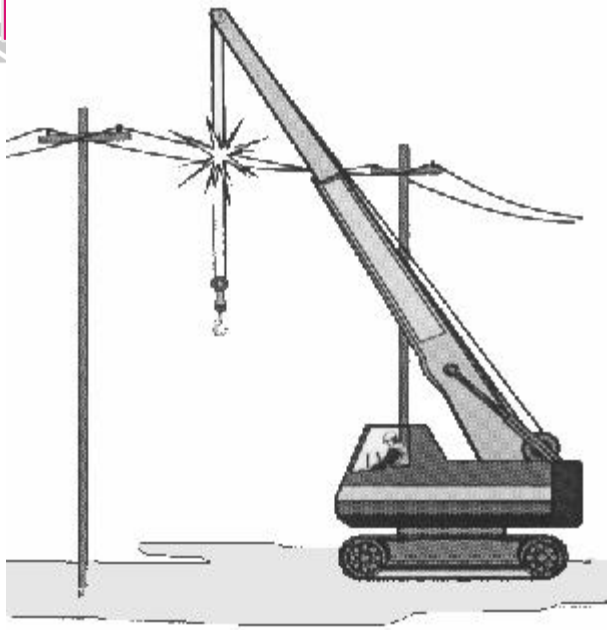

Be aware of overhead exposed energized equipment such as overhead lines, cords, or overhead crane rails. Minimum approach distance to overhead lines below 72,500 volts is 10 feet. (Limited Approach Boundary - 70E)

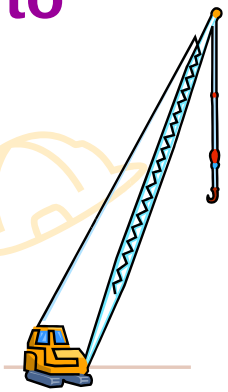

Look Up and Stay Alive!

There may be other requirements that apply to approach distances to overhead lines. Make sure you inquire about these requirements.

Possible examples may include:

- **Approach distances may be different than 70E requirement**
- **Overhead utilities may be under separate management.**

Harmony

The National Electrical Code (NEC) has specific clearance requirements around electrical equipment to maintain safe working clearances for electrical workers. These are dedicated spaces and include width, height, and depth requirements. The clearance distances are based on configuration and voltage level.

You must keep these spaces clear. Check with a qualified electrical worker to ensure you do not store or install materials and equipment in theses dedicated spaces.

Harmony

Batteries present special hazards in the work place. They may contain an acid or an alkaline substance in the electrolyte. If you get electrolyte on you, rinse with water for 15 minutes then get medical help. Failure to do this may lead to severe burns or blindness.

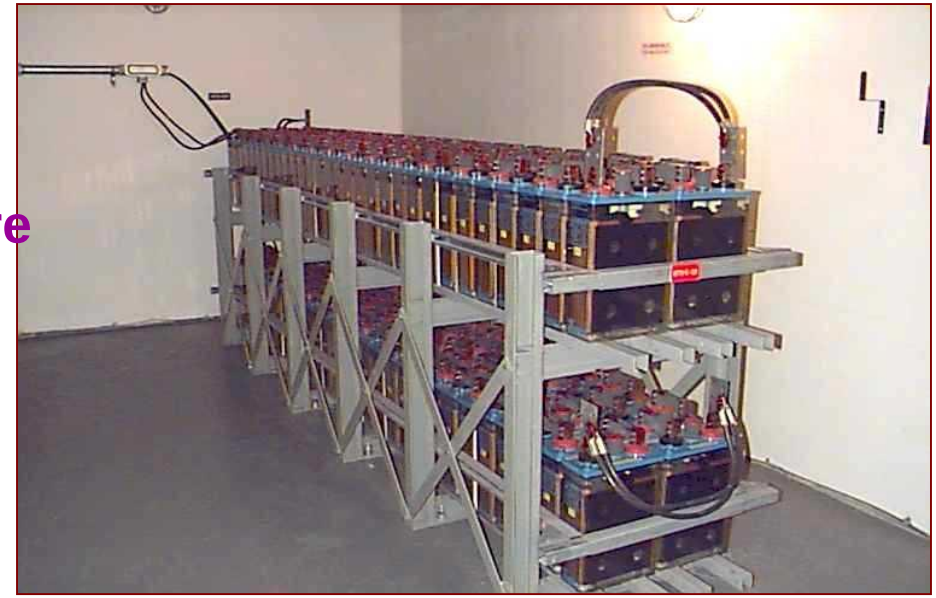

Most batteries give off explosive gasses when charged. Make sure adequate ventilation is available. Don't cause sparks or flames in the vicinity of batteries. A catastrophic explosion may occur.

Batteries can store significant amounts of electrical energy. Do not use conductive equipment/tools around batteries. If you cause an ARC, you can be severely injured. Remember, <u>there is no off switch on a battery</u>!

Harmony

If you must perform work around batteries or battery racks, eye wash/drench stations are required.
Spill kits for the electrolyte are to be available. Use non-sparking/non-conductive tools.

Electrical System Intrusions

- One of the most common occurrences with electrical systems around the DOE complex is excavating, cutting or drilling into electrical systems.
- There are many methods of trying to identify buried or concealed electrical conduits and cables. None of them are fool proof.

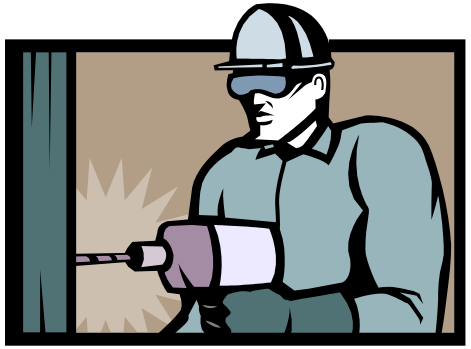

- Facilities have developed methods and procedures to help prevent these occurrences.
- If you are involved in this type of activity, it is your responsibility to comply with facility requirements.

Harmony

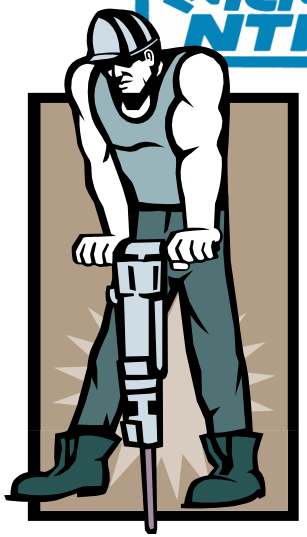

If location or condition of energized electrical systems is uncertain, utilize electrically rated PPE and other protective measures such as drill stops, hand digging, vacuum excavators, etc.

Conduit cut – Location was right, depth was wrong.

Consider the following ORPS event:

Demolition Worker Cuts Energized Circuit whi Removing Conduit --

On October 14, 2003, a demolition craftsman cut an energized 110-volt circuit while removing conduit with a double insulated reciprocating saw. The conduit contained numerous branches and only a cursory check was made for air-gapped circuits. Work control documents specifically required verification of zero energy or installation of a lockout/tagout if verification could not be performed. (continued)

Harmony

ORPS (continued)

Important Points:

- The demolition worker failed to request a “meter check” to ensure a zero-energy condition existed.
- The worker failed to complete a thorough walkdown of the area to verify that all conduit branches and runs were air-gapped and there was no potential for energy being fed from other sources.

Contributors:

- The demolition worker made assumptions about the task based on previous work experience on the same system months earlier. He assumed the lighting circuit was totally de-energized by an electrician when the light circuits were removed.

(Make sure you don’t make the same kinds of errors)

Harmony

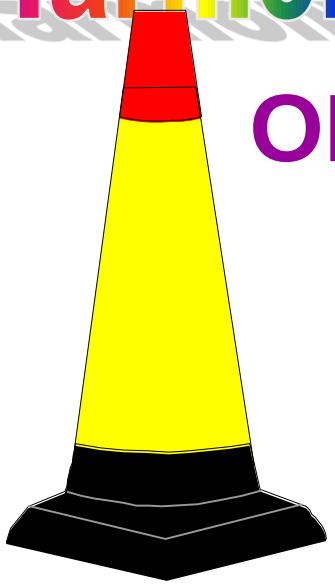

OBEY ALL SIGNS AND BARRIERS!

Signs, Symbols, Tags, and Barricades are used to warn personnel of potential electrical hazards.

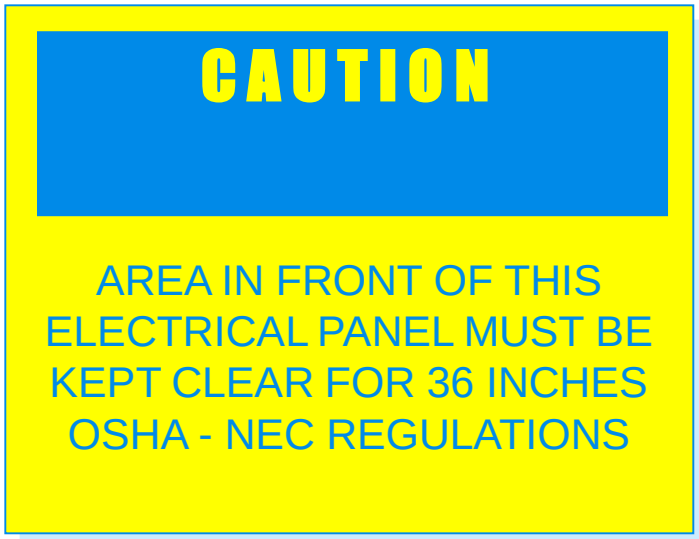

Harmony

REMEMBER!

- The results of a mistake with electrical energy occur at the speed of light. There is not time to react after the error is made. You must think ahead.
- Pre-job briefs, planned work instructions, and facility requirements are not optional. Pay attention and obey all the rules, not just the ones that are convenient. They provide the edge you need to be safe with electrical energy.

- Post-job reviews help keep us from repeating errors – participate in them.
- You are responsible for your safety.

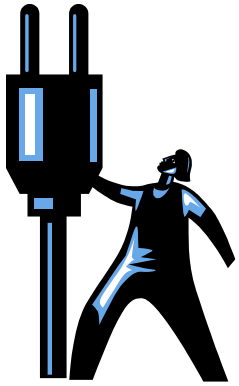

Summary

- Many items concerning electrical safety have been presented. It isn't possible to cover all the hazards electrical energy can present.

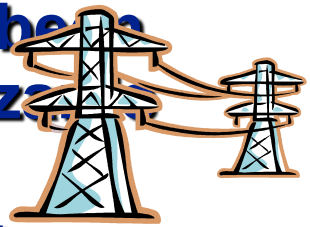

- If you identify a hazard, make sure you and others are safe and then report it immediately to the proper authority for your work location.
- 70E requires electrical workers to be ALERT.
- You are also required to be ALERT and AWARE of potential electrical hazards. If you are not, you can be severely injured or killed
- **Above all, BE SAFE.**

Thanks