Electrical grounding and earthing system

Shashi Om Katiyar

Ex-AGM NTPC

CONTENTS:-

- ✓ Introduction
- ✓ Function of earthing
- ✓ Methods of conventional earthing
- ✓ Types of earthing system
- ✓ Application
- ✓ Conclusion

www.powerpointdesigns.net

Grounding:

Grounding is the process of removing the excess charge on an object by means of the transfer of electrons between it and another object of substantial size. When a charged object is grounded, the excess charge is balanced by the transfer of electrons between the charged object and a ground.

Earthing:

Earthing is used to protect us from an electric shock. It does this by providing a path for a fault current to flow to earth. It also causes the protective device to switch off the electric current to the circuit that has the fault by help of fuse.

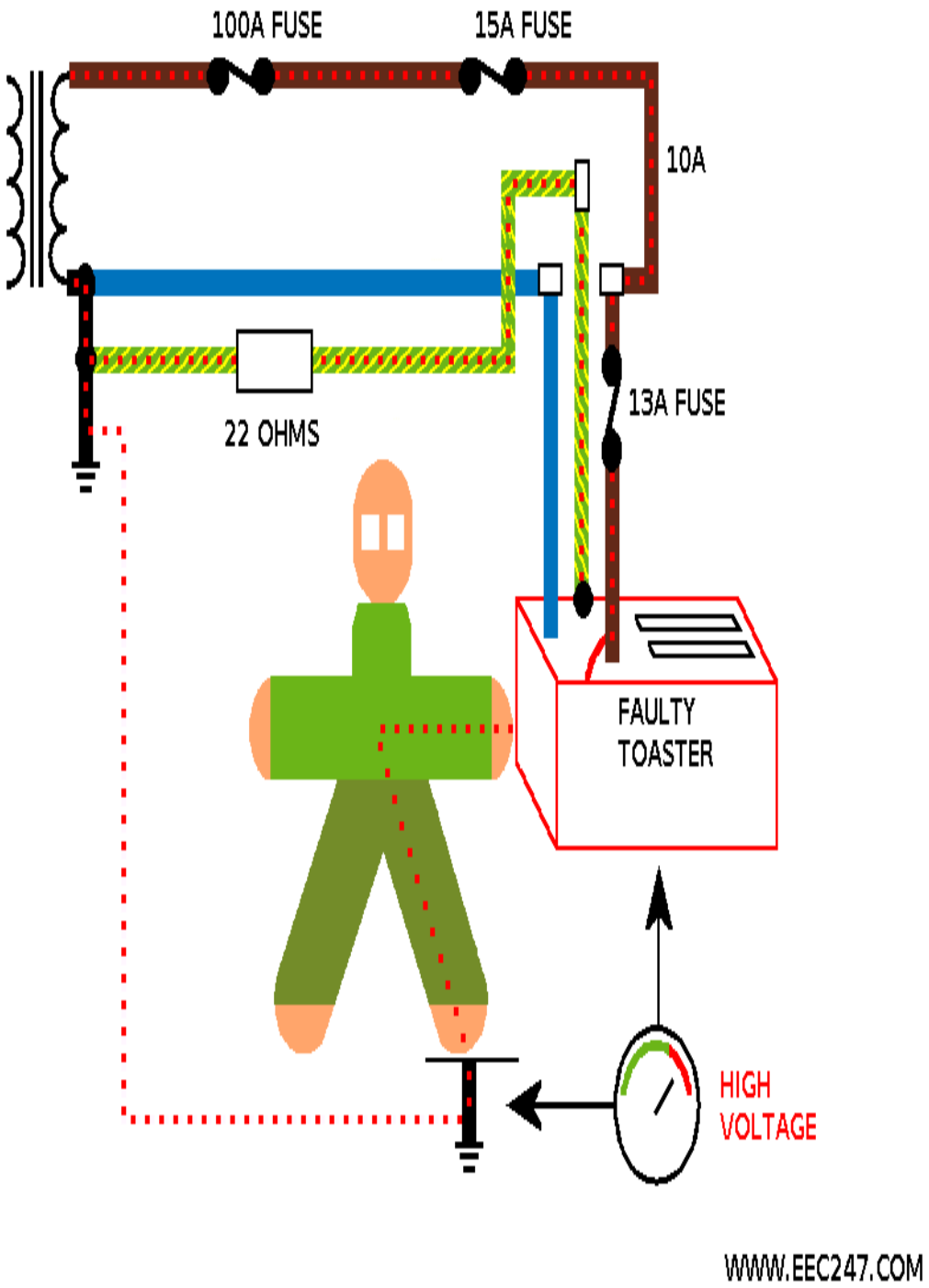

What Is Earthing

- The term earthing means connecting the neutral point of supply system or the non current carrying parts of the electrical apparatus to the general mass of earth in such a manner that all times an immediate discharge of electrical energy takes place without danger.

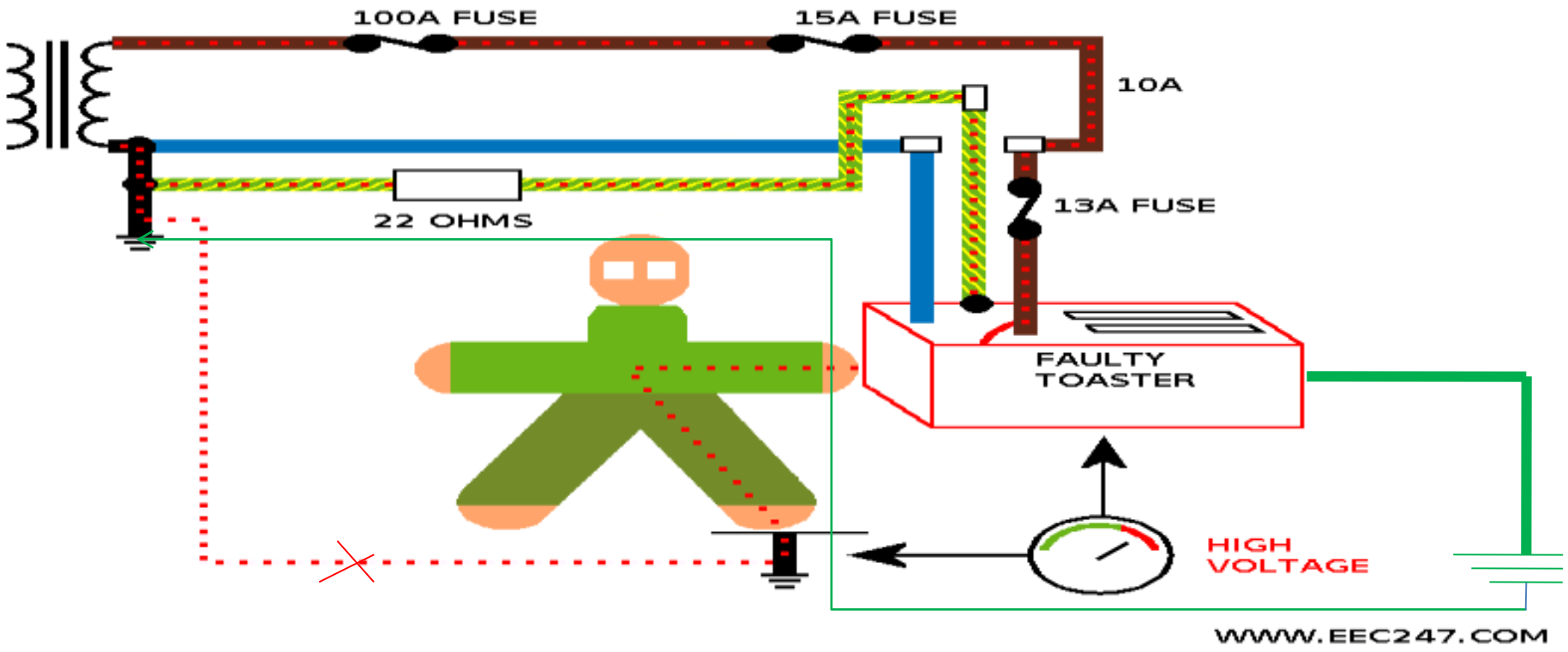

FUNCTION OF EARTHING:-

- Equipment Earth : Path for fault current, lower touch voltage, protection against electric shock.
- Lighting Earth : Low resistance path to diverse the current under lightning attack.
- Telecom Earth : Signal Earth, reduce noise and interference, stabilize DC supply voltage and prevent electric shock.
- Computer Earth : reduce interference, maintain supply voltages.

Methods of Conventional Earthing:-

- Plate Earthing
- Pipe Earthing
- Rod Earthing

Earthing Electrode

The resistance of a ground electrode has 3 basic components:

A)The resistance of the ground electrode itself and the connections to the electrode.

B)The contact resistance of the surrounding earth to the electrode.

C)The resistance of the surrounding body of earth around the ground Electrode. It consist of three basic components:

1.Earth Wire

2.Connector

3.Electrode

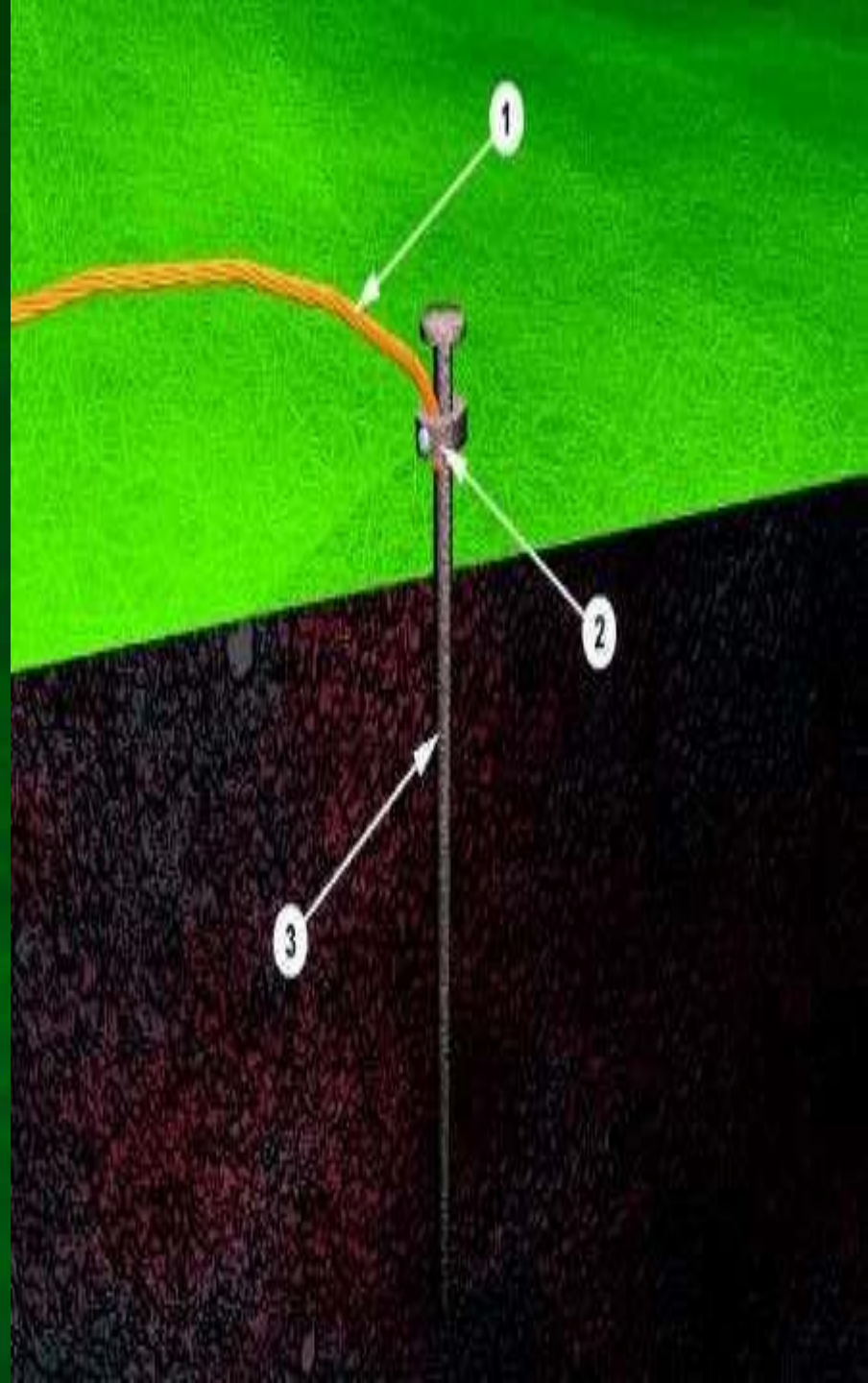

Electrode-earth contact resistance

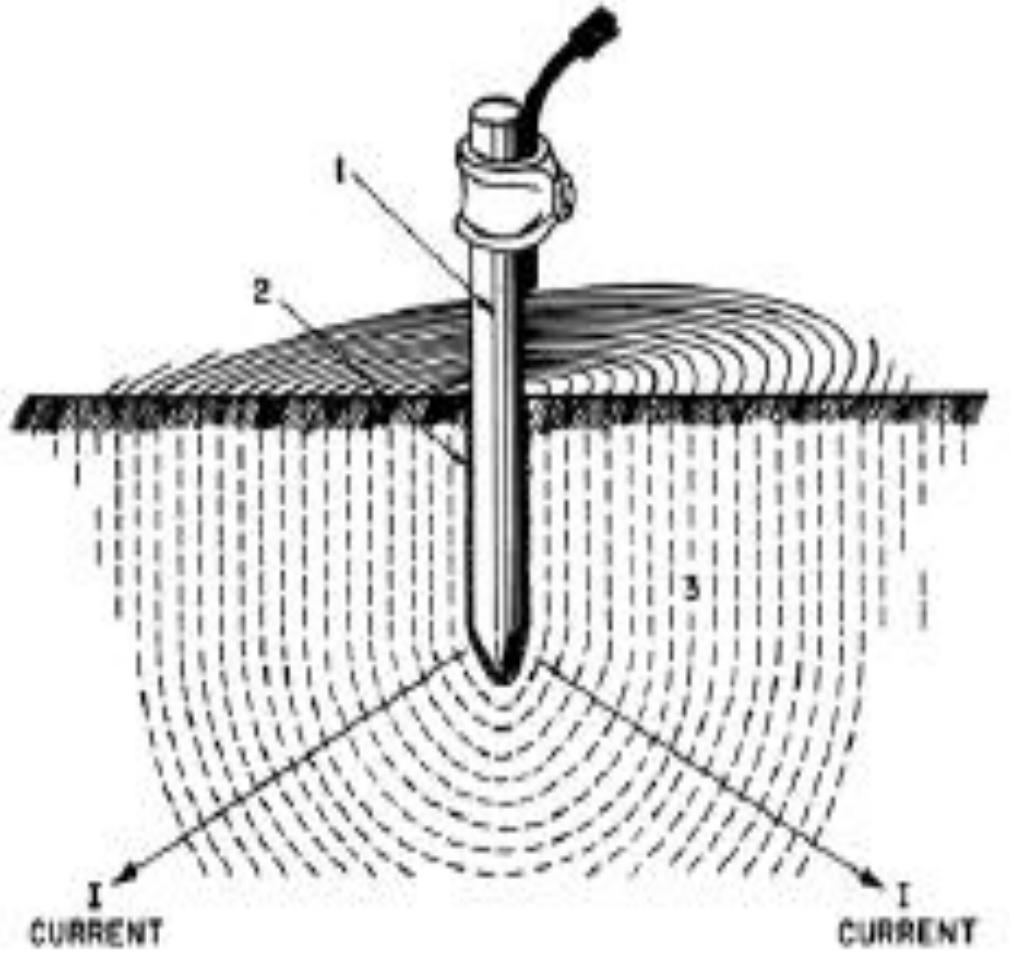

- This is much less than you might think.
- If the electrode is free from paint or grease and the earth is packed firmly, contact resistance is negligible.
- Rust on iron electrode has little or no effect; the iron oxide is readily soaked with water and has less resistance than most soil.

Plate Earthing

In this type of earthing plate either of copper or of G.I. is buried into the ground at a depth of not less than 3 meter from the ground level.

- The earth plate is embedded in alternative layer of coke and salts for a minimum thickness of about 15cm.
- The earth wire(copper wire for copper plate earthing and G.I. wire for G.I. plate earthing) is securely bolted to an earth plate with the help of bolt nut and washer made of copper, in case of copper plate earthing and of G.I. in case of G.I. plate earthing.

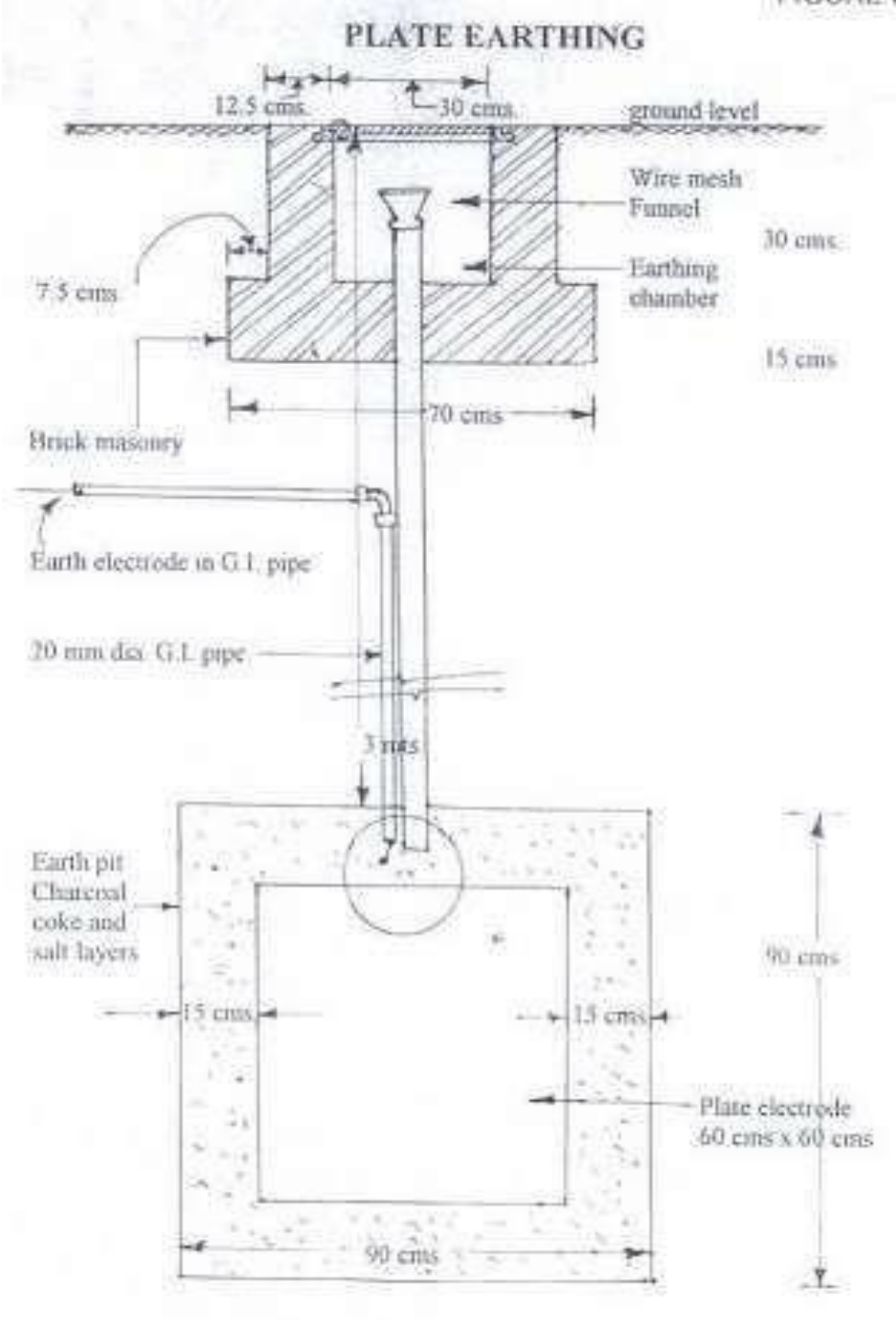

Pipe Earthing

- Pipe earthing is best form of earthing and it is cheap also in this system of earthing a GI pipe of 38 mm diameter and 2meters length is embedded vertically in ground to work as earth electrode but the depth depend upon the soil conditions, there is no hard and fast rule for this.
- The earth wire are fastened to the top section of the pipe with nut and bolts.
- The pit area around the GI pipe filled with salt and coal mixture for improving the soil conditions and efficiency of the earthing system.
- It can take heavy leakage current for the same electrode size in comparison to plate earthing.
- The earth wire connection with GI pipes being above the ground level can be checked for carrying out continuity test as and when desired, while in plate earthing it is difficult.
- In summer season to have an effective earthing three or four bucket of water is put through the funnel for better continuity

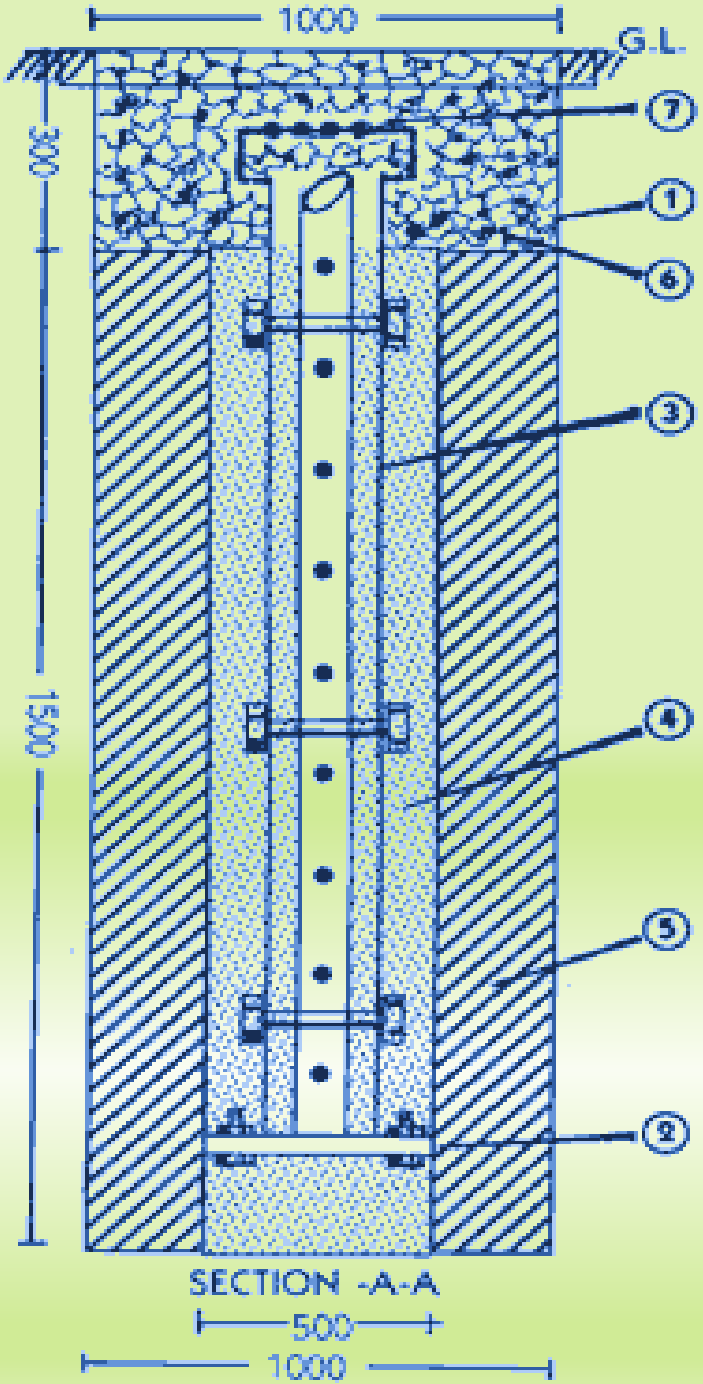

ROD EARTHING

- In this system of earthing 12.5mm diameter solid rods of copper 16mm diameter solid rod of GI or steel or hollow section of 25mm GI pipe of length not less than 3 meters are driven vertically into the earth
- In order to increase the embeded length of electrod under the ground, which is some time necessary to reduce the earth resistance to desired value more than one rod section are hammered one above the other.
- This system of earthing is suitable for area which are sandy in character .
- This system of earthing is very cheap

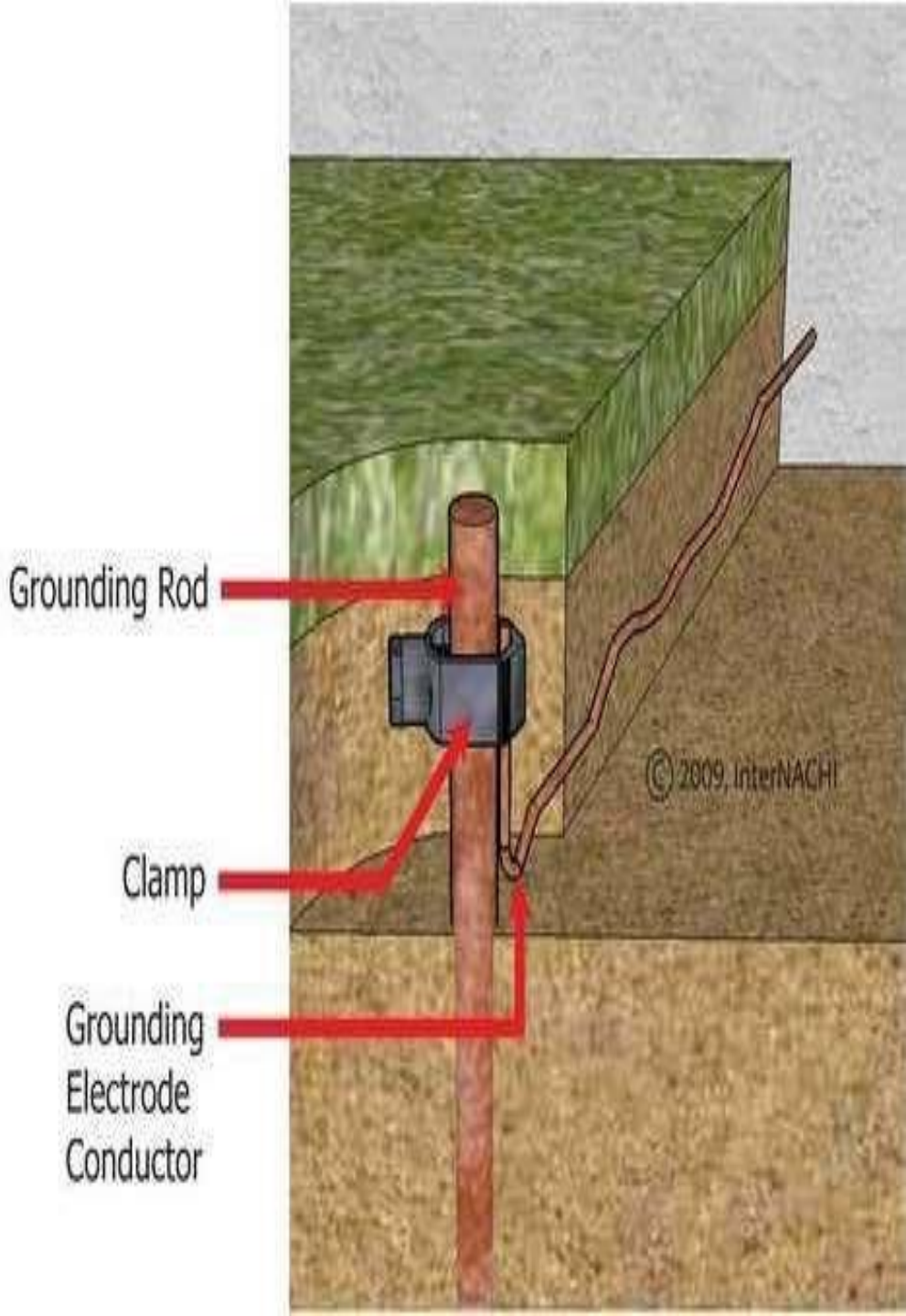

Types of earthing system:-

- TN System
- TT System
- IT System

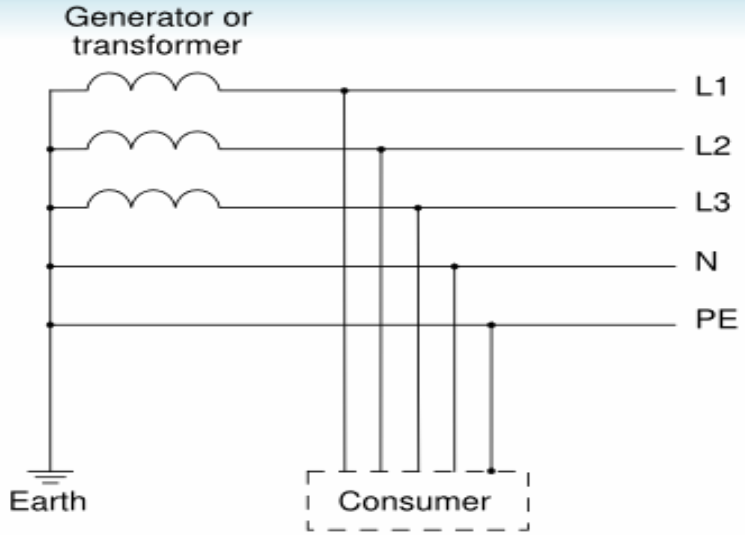

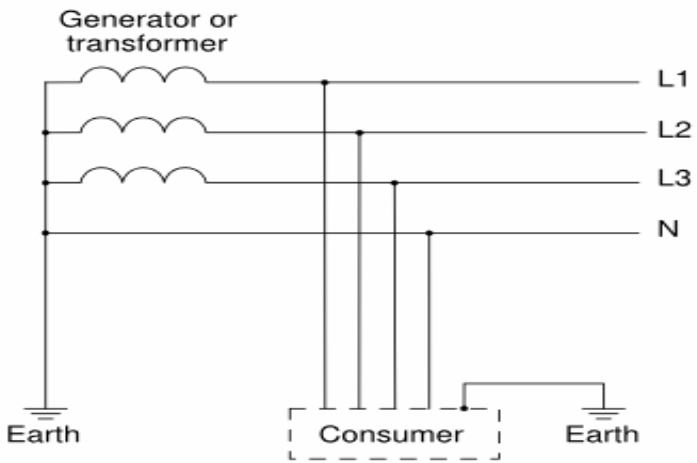

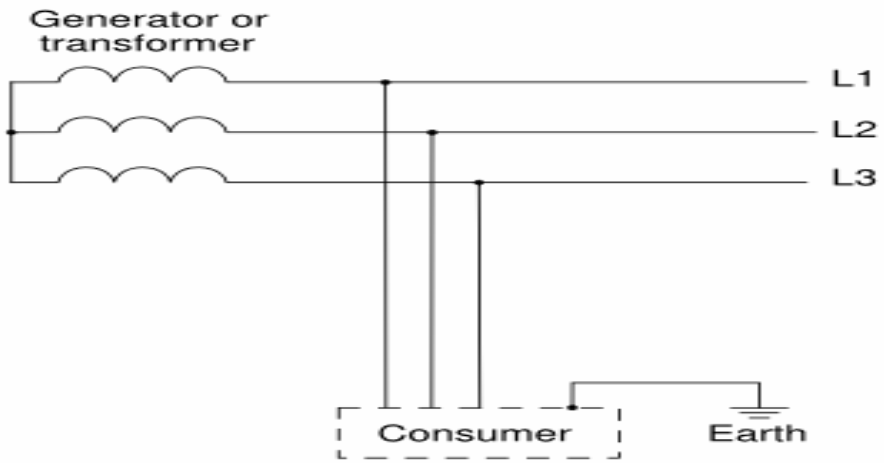

Multipoint grounding:-

- A Multipoint Ground is an alternate type of electrical installation that attempts to solve the Ground Loop and Mains hum problem by creating many alternate paths for electrical energy to find its way back to ground.

- The distinguishing characteristic of a multipoint ground is the use of many interconnected grounding conductors into a loose grid configuration.

- There will be many paths between any two points in a multipoint grounding system, rather than the single path found in a star topology ground.

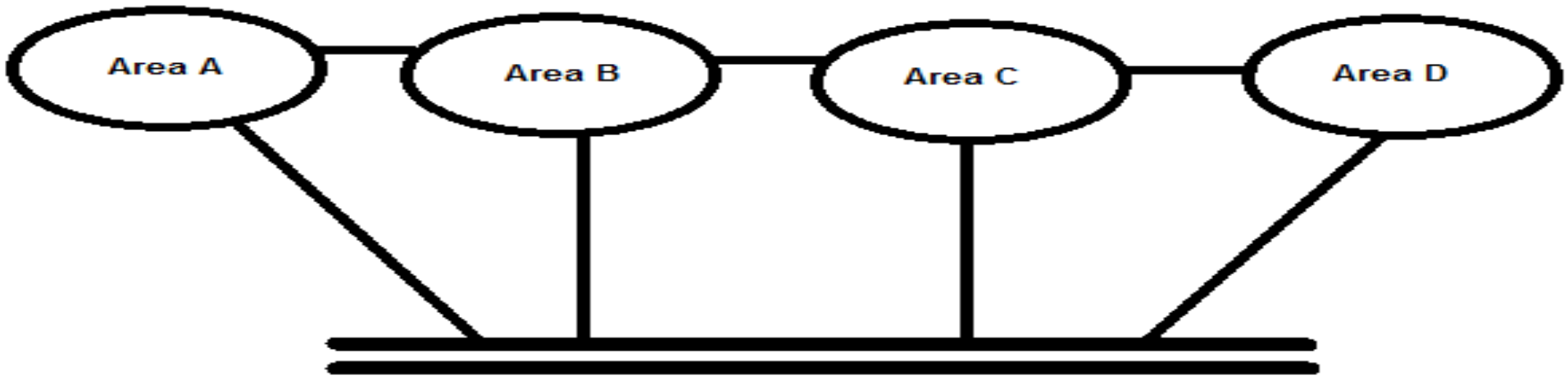

Multiple Grounding

TWO CLASS OF PROTECTION:-

- Class I protection –use of barrier/insulation and connection of protective conductor to equipment metallic enclosure in order to protect against electric shock.

- Class II protection –beside of the basic insulation, addition layer of insulation apply to the enclosure. Therefore no extraneous conductive part. The additional layer is independent to the basic insulation so that under failure of basic insulation, it offers additional protection.

APPLICATION:-

- Protect human against lightning and earth fault condition.
- Protect the premises against lightning and earth fault condition.
- Provide low resistance and safe path for lightning and fault current.
- All metallic enclosure and extraneous conductive parts are at equipotential.
- LV System Earth

The Six Point Plan of Protection

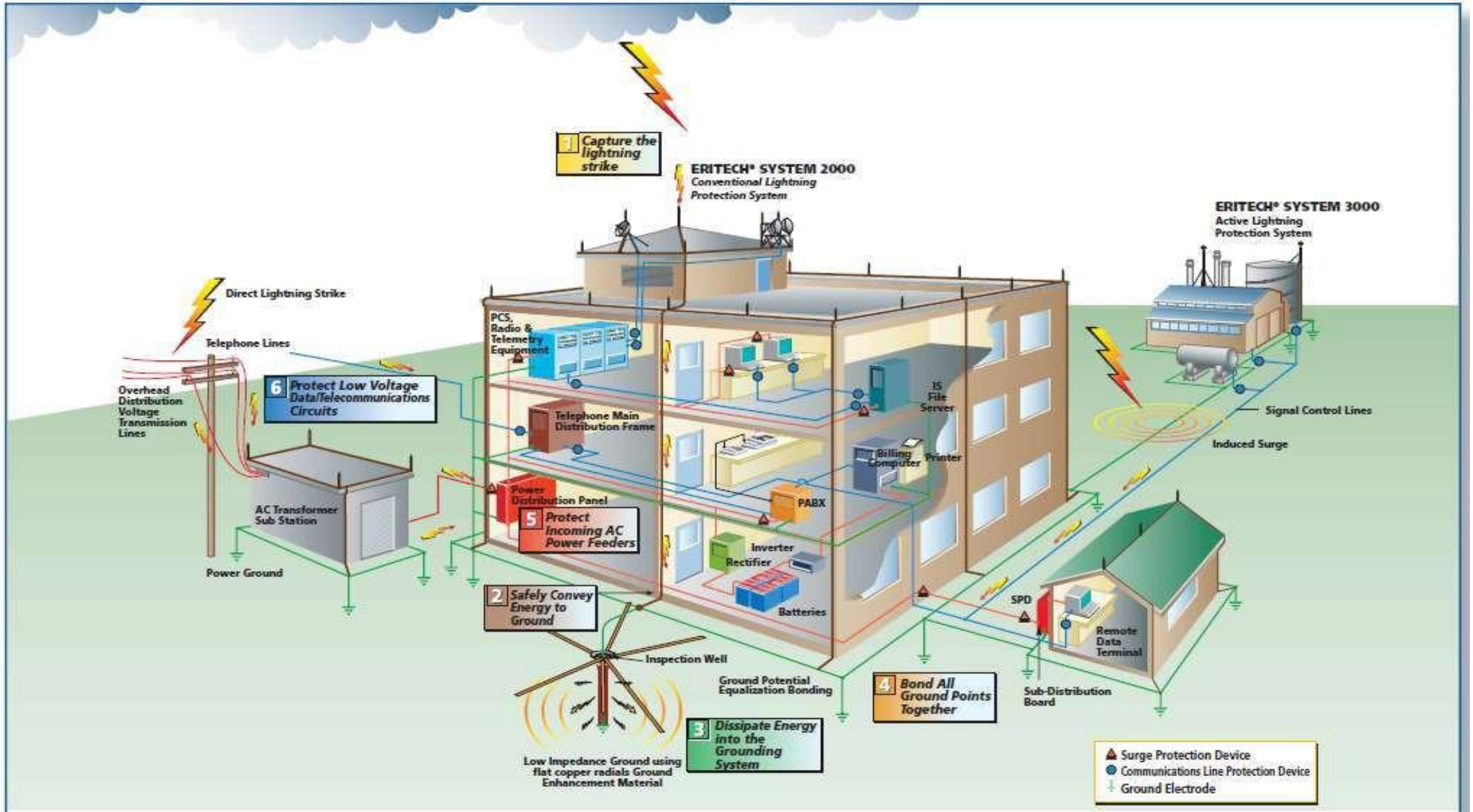

1. **Capture the lightning strike. Capture** the lightning strike to a known and preferred attachment point using purpose-designed air terminal system.
2. **Convey this energy to ground. Conduct** the energy to the ground via a purpose-designed down conductor.
3. **Dissipate the energy into the grounding system. Dissipate** the energy into a low impedance grounding system.
4. **Bond all ground points together. Bond** all ground points to eliminate ground loops and create an equipotential plane.
5. **Protect incoming AC power feeders. Protect** equipment from surges and transients on incoming power lines to prevent equipment damage and costly operational downtime.
6. **Protect low voltage data/telecommunications circuits. Protect** equipment from surges and transients on incoming telecommunications and signal lines to prevent equipment damage and costly operational downtime.

The objective of a grounding system are:

1. To provide safety to personnel during normal and fault conditions by limiting step and touch potential.
2. To assure correct operation of electrical/electronic devices.
3. To prevent damage to electrical/electronic apparatus.
4. To dissipate lightning strokes.
5. To stabilize voltage during transient conditions and to minimize the probability of flashover during transients.
6. To divert stray RF energy from sensitive audio, video, control, and computer equipment.

A safe grounding design has two objectives:

1. To provide means to carry electric currents into the earth under normal and fault conditions without exceeding any operating and equipment limits or adversely affecting continuity of service.

2. To assure that a person in the vicinity of grounded facilities is not exposed to the danger of critical electric shock.

Introduction to grounding

- The primary goal of the grounding system throughout any facility is SAFETY.

✖ Grounding is implemented to ensure rapid clearing of faults and to prevent hazardous voltage, which in turn reduce the risks of fires and personnel injuries. Grounding serves the primary functions of referencing the AC systems and providing a means to ensure fault c

- ✖ 99.5% survival threshold –
- + 116 mA for one (1) second.
- + 367 mA for zero point one (0.1) second

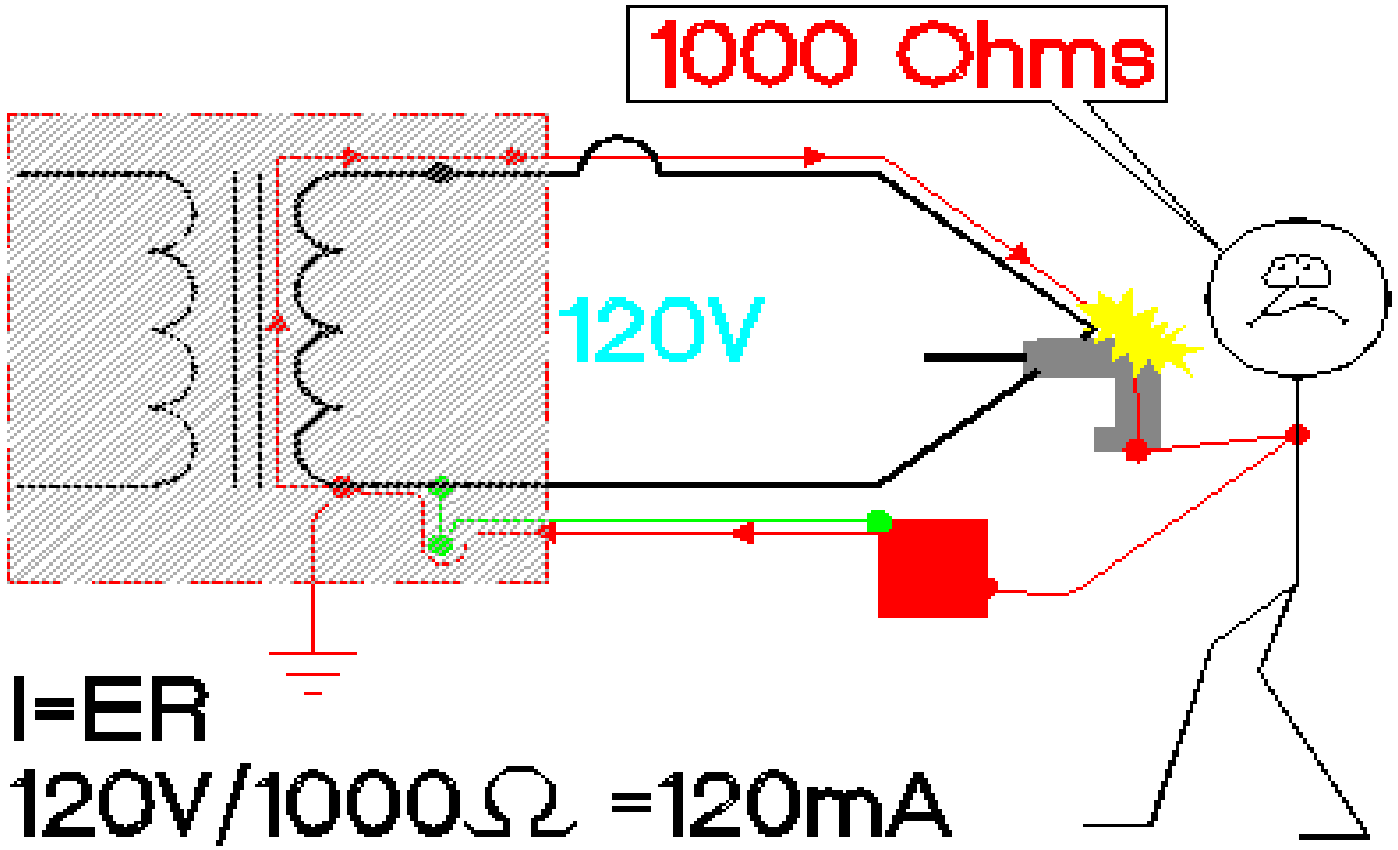

SIX (6) GROUNDING SYSTEMS IN USE

1. Equipment grounds,
2. Static grounds,
3. Systems grounds,
4. Maintenance grounds,
5. Electronic grounds,
6. Lightning grounds

EQUIPMENT GROUNDS:

- An equipment ground is the physical connection to earth of non-current carrying metal parts.

- This type grounding is done so that all metal part of equipment that personnel can come into contact with are always at or near zero (0) volts with respect to ground.

- All metal parts must be interconnected and grounded by a conductor in such away as to ensure a path of lowest impedance for flow of ground fault current.

- Typical items (equipment) to be grounded are; electrical motor frames, outlet boxes, breaker panels, metal conduit, support structures, cable tray, to name a few.

STATIC GROUNDS:

- A static ground is a connection made between a piece of equipment and the earth for the purpose of draining off static electricity charges before a flash over potential is reached.

- This type grounding system is utilized in dry materials handling, flammable liquid pumps and delivery equipment, plastic piping, and explosive storage facilities.

System ground

- A system ground refers to the point in an electrical circuit that is connected to earth.
- This connection point is typically at the electrical neutral.
- The sole purpose of the system ground is to protect equipment.
- This type ground also provides a low impedance path for fault currents improving ground fault coordination.
- This ensures longer insulation life of motors, transformers and other system components

Maintenance ground

- This type ground is utilized for safe work practices, and is a temporary ground.

ELECTRONIC AND COMPUTER GROUNDS

- Grounding for electronic equipment is a special case in which the equipment ground and the system ground are combined and applied in unity.

- Electronic equipment grounding systems must not only provide a means of stabilizing input voltage levels, but also act as the zero (0) voltage reference point.

- Grounding systems for the modern electronics installation must be able to provide effective grounding and bonding functions well into the high frequency megahertz range.

LIGHTNING PROTECTION:

- Lightning protection grounding requirements are dependent upon the structure, equipment to be protected, and the level of lightning protection required of desired.

LIGHTENING- A NATURAL PHENOMENA

1ST ACTION :FLASH OVER- SUSPENSION INSULATORS TO GANTRY

2ND ACTION: DAMGES TO SUSPENSION INSULATORS

FINAL ACTION: FLASHOVER IN BREAKERS

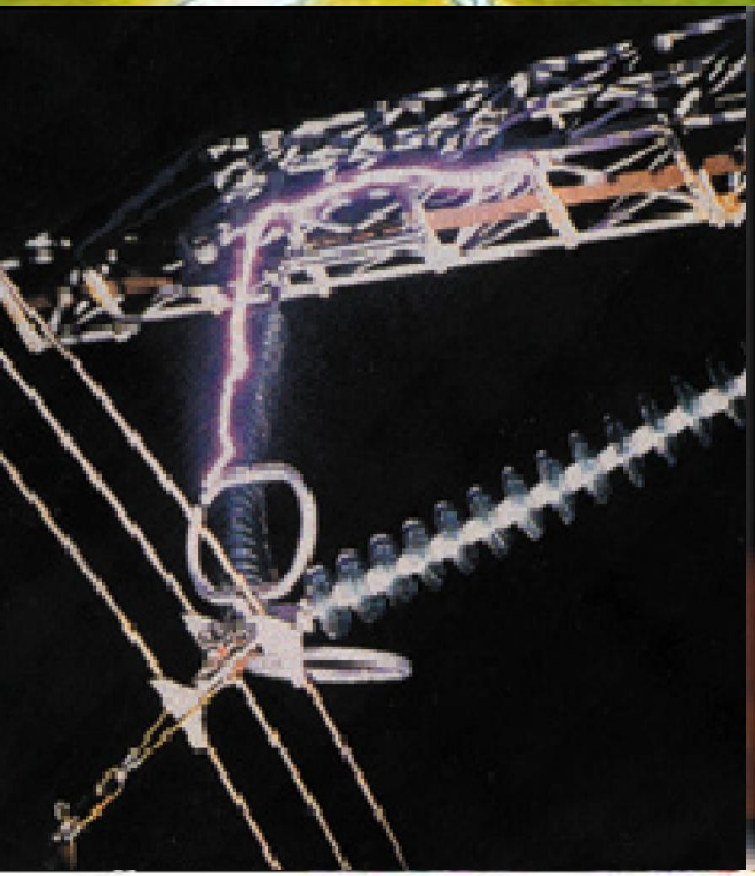

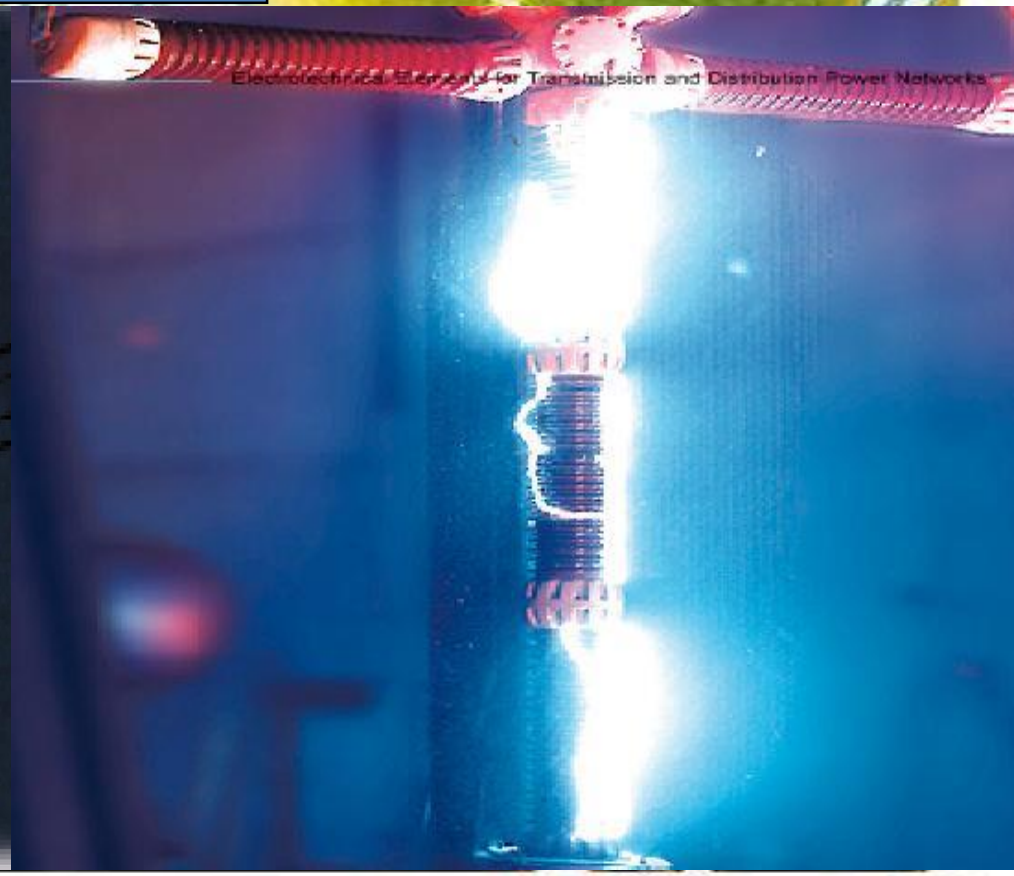

MATHMATICL MODEL OF LIGHTENING

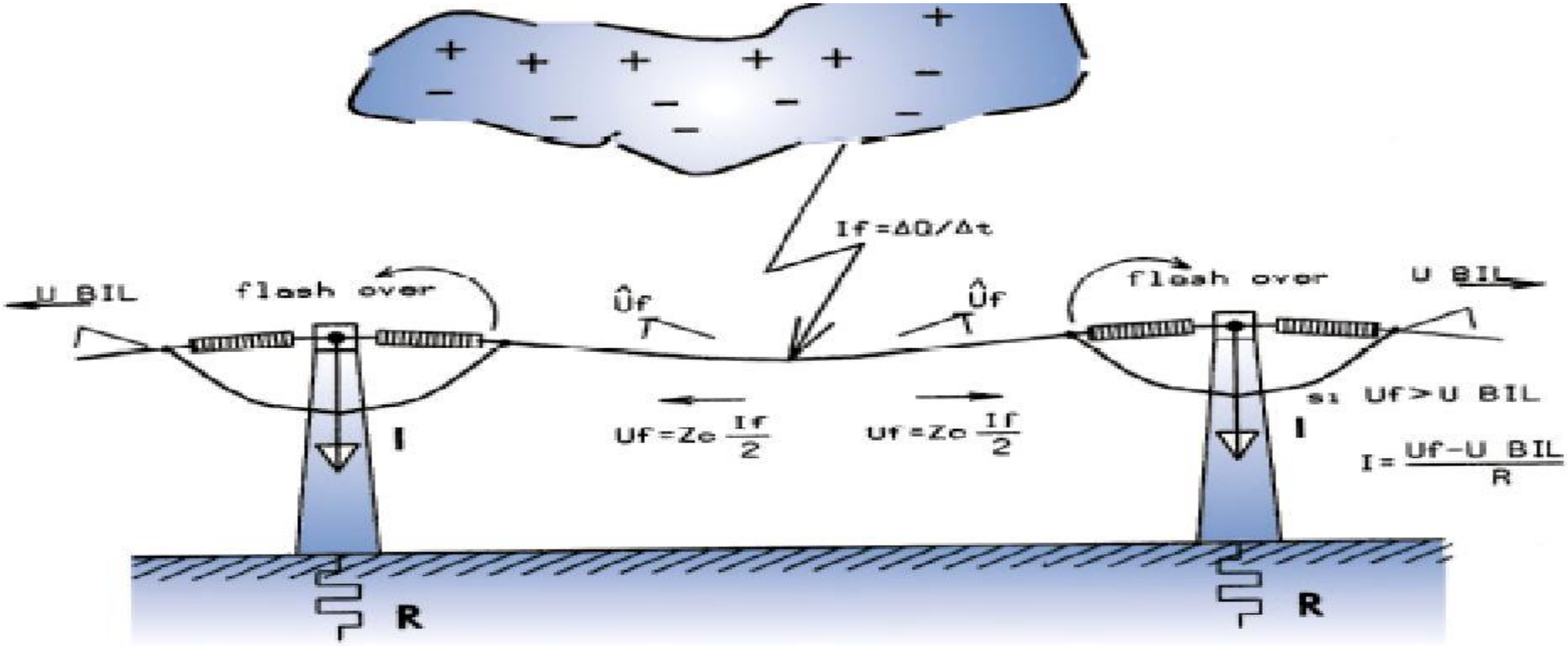

SOURCE OF OVERVOLTAGE

- External:-
  - lightening
  - geomagnetic storm.
- Internal
  - switching
    - line/capacitor switching.
    - inductive current breaking.
    - transformer feeder energization.
- Temporary overvoltage
  - 1 phase fault.
  - resonance (sub harmonic)
  - transformer inrush current

Cross section of LA

Sealing gasket

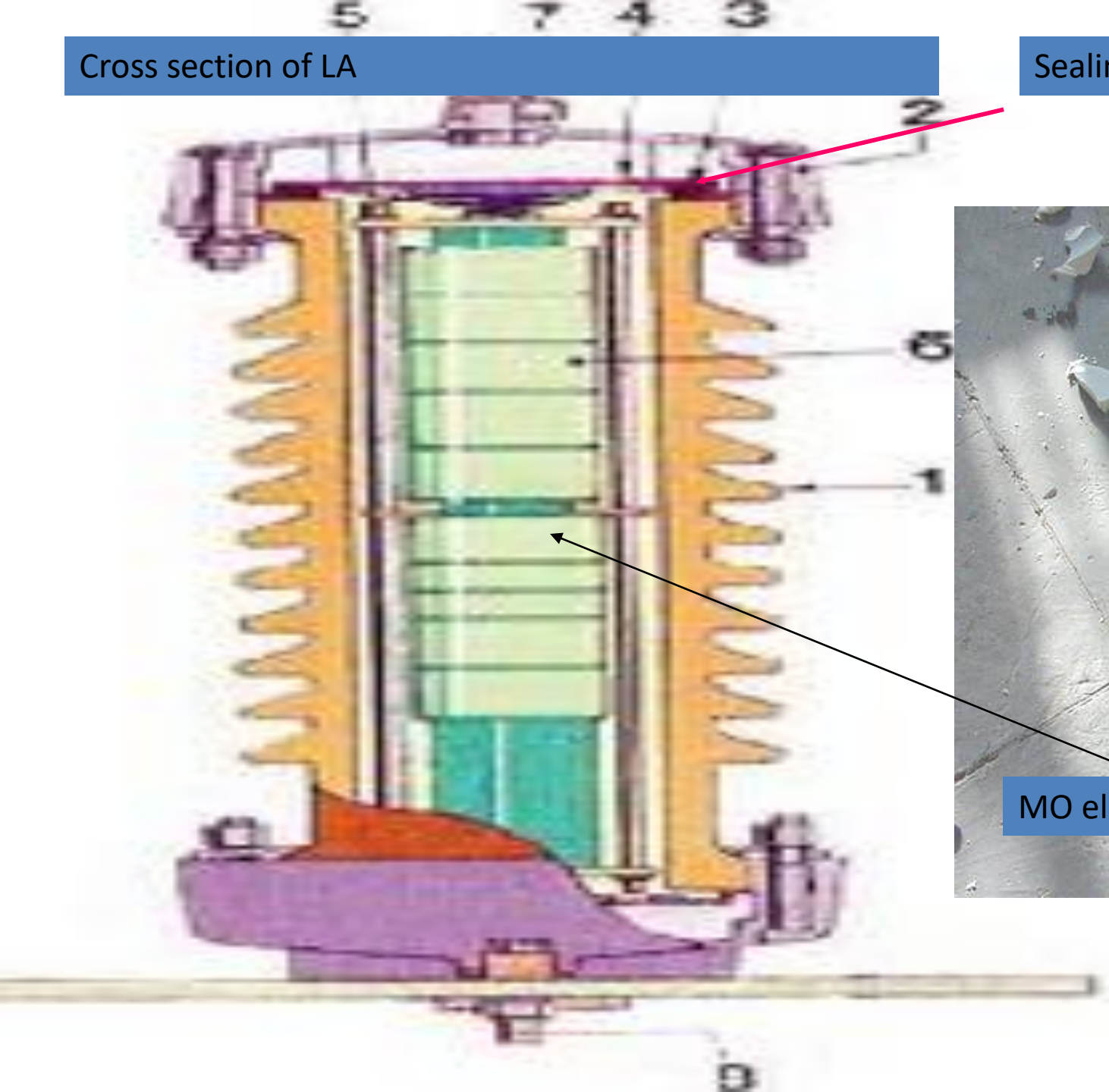

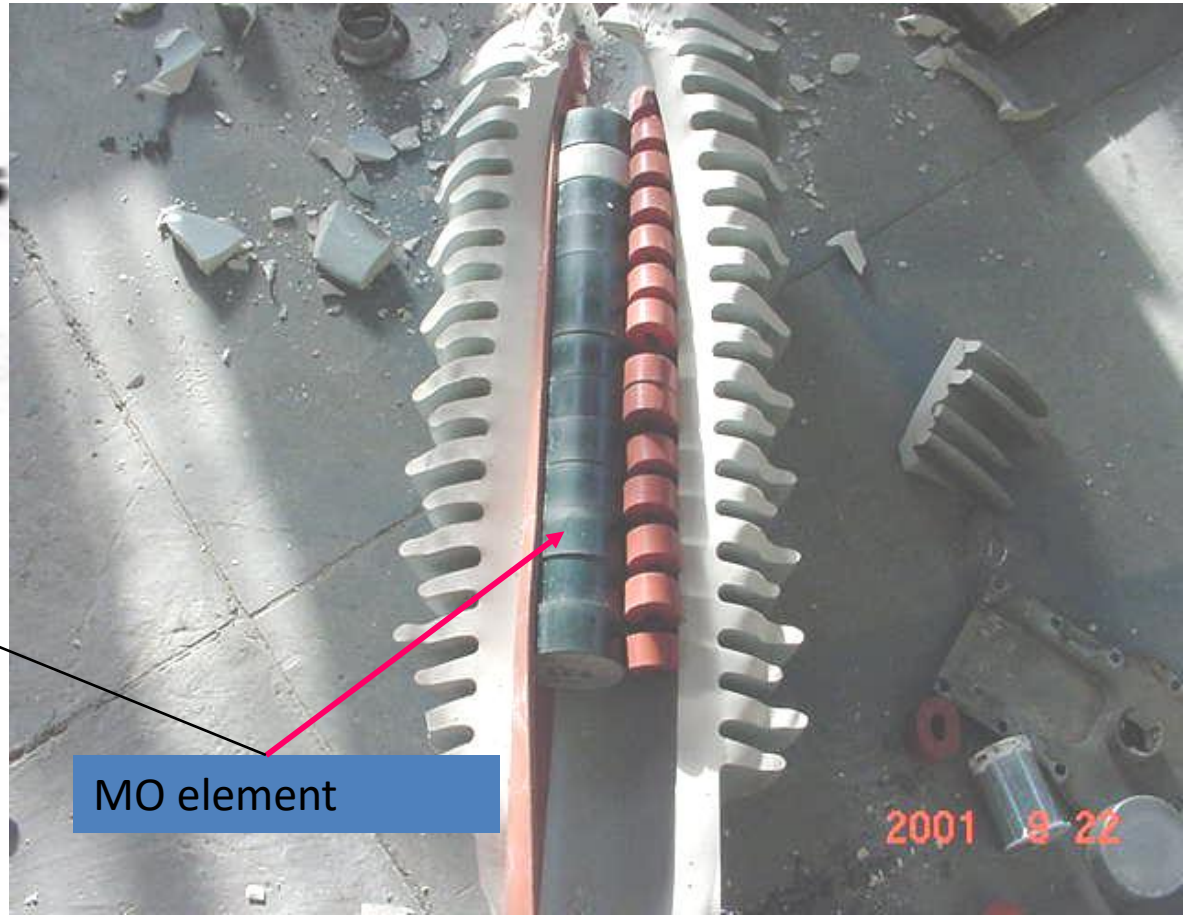

MO element

Equivalent Circuit

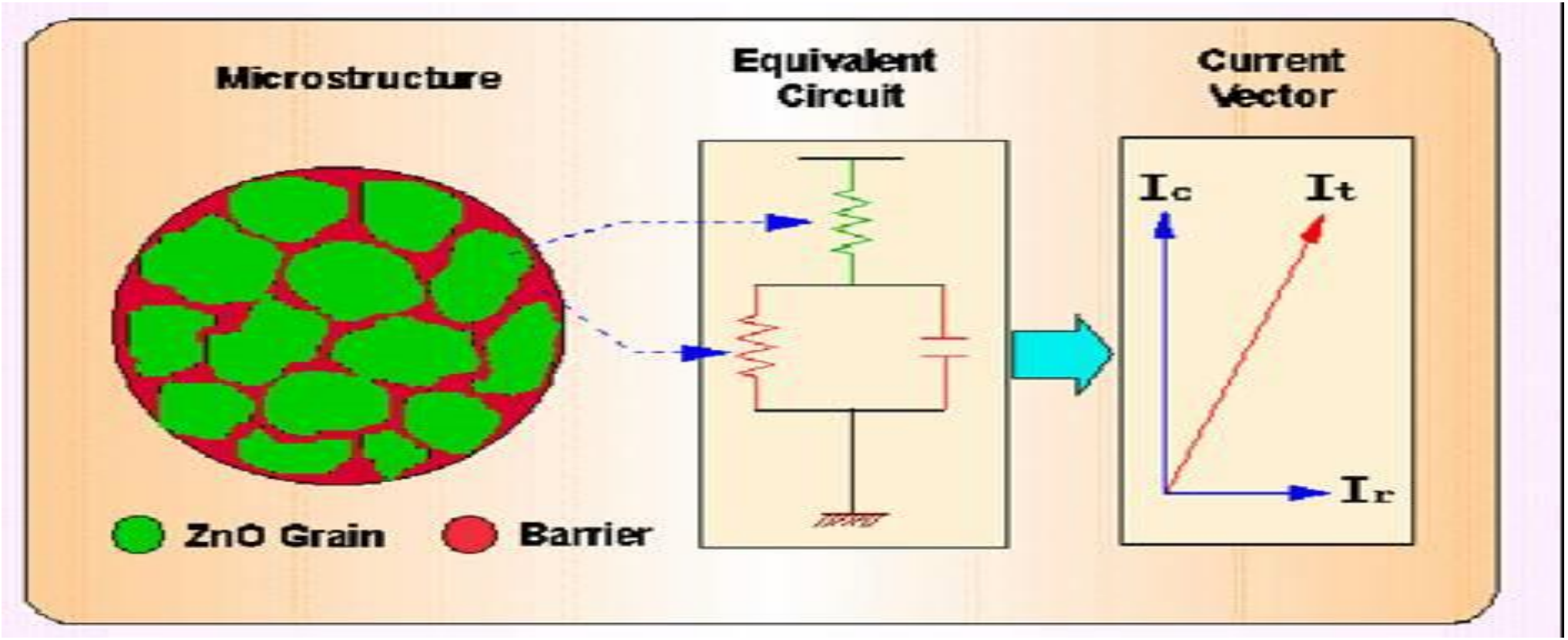

Basic Circuit of Third Harmonic Resistive Current Measurement

Conduction of ZnO discs

LA- FUNDAMENTALS

- LIMIT OVER VOLTAGE .
- ACT AS INSULATOR FOR NORMAL VOLTAGE .

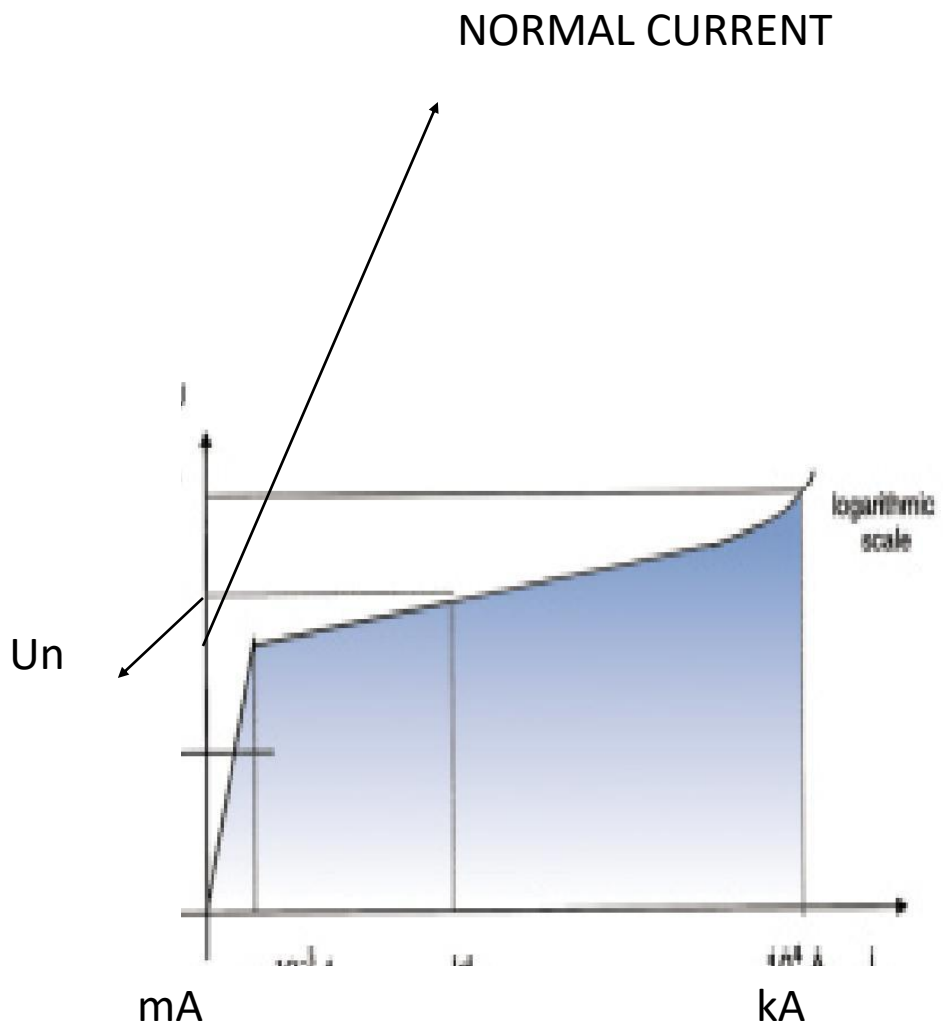

THERMAL IMAGE OF DEFECTIVE LA.
CASE STUDY :1 DADRI-MANDULA1 -Y- PH

DELTA > 8 C

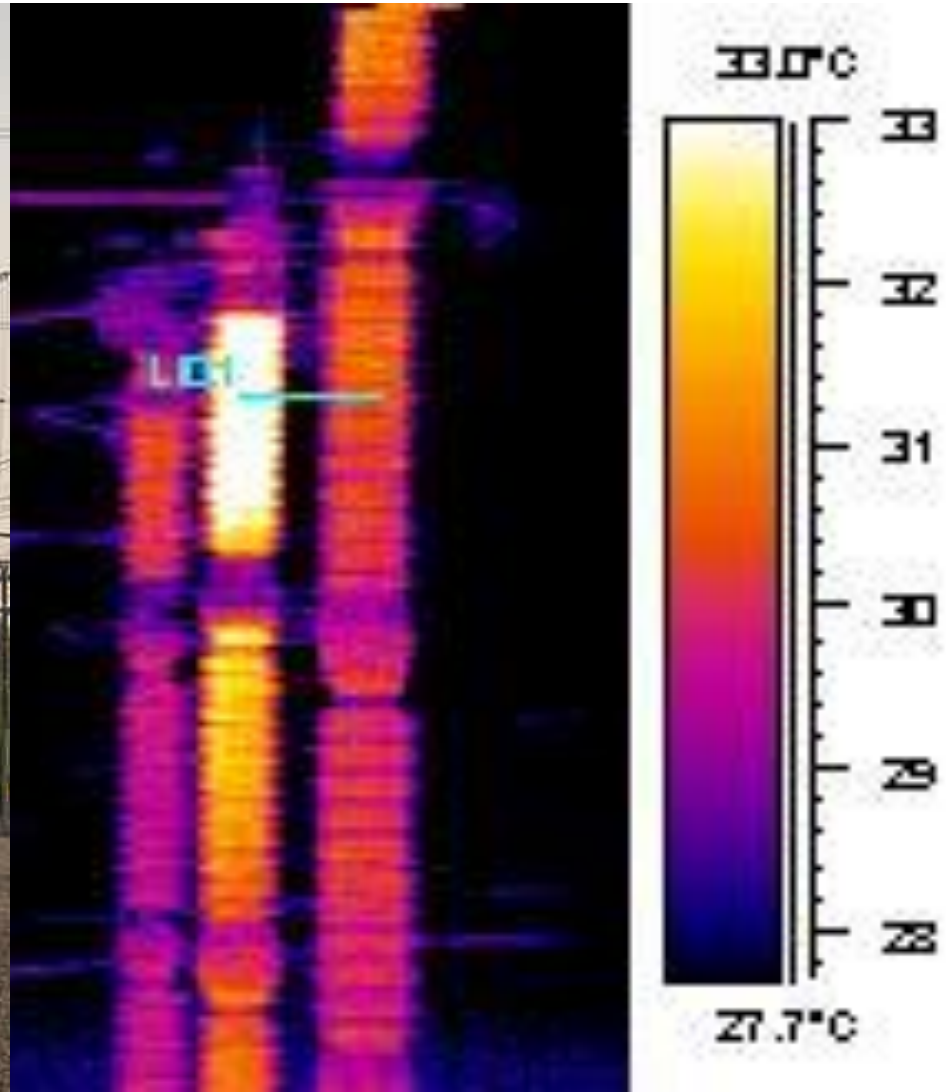

IMPORTANCE OF LIGHTENING/SURGE ARRESTER

PROTECTS SUBSTATTION EQUIPMENT FROM

- SWITCHING OVERVOLTAGE
- LIGHTENING OVERVOLTAGE

1. EQUIPMENT GROUNDING CONDUCTORS

4. GROUND RESISTANCE

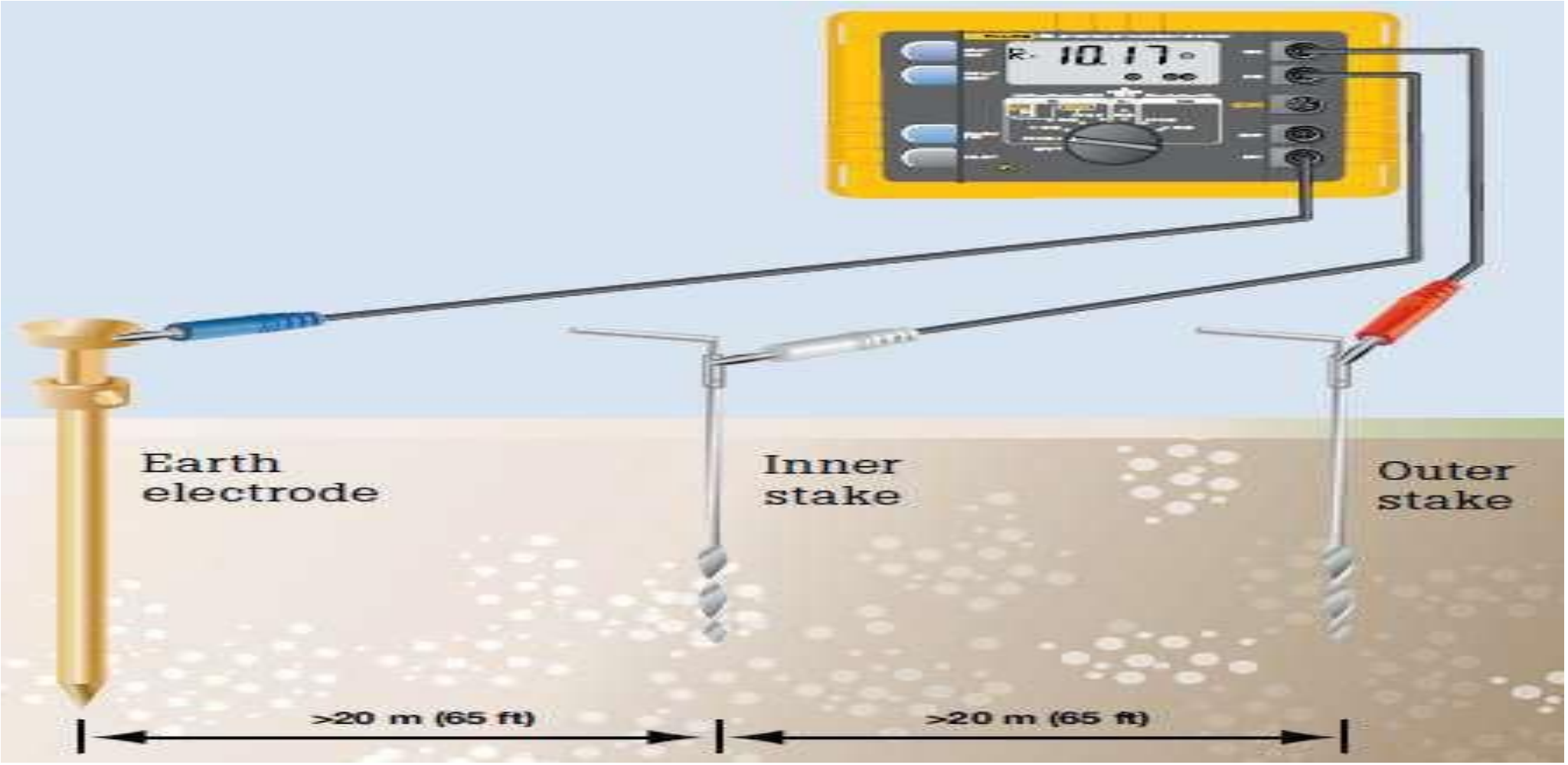

5. GROUND RODS

8. LIGHTNING PROTECTION SYSTEM

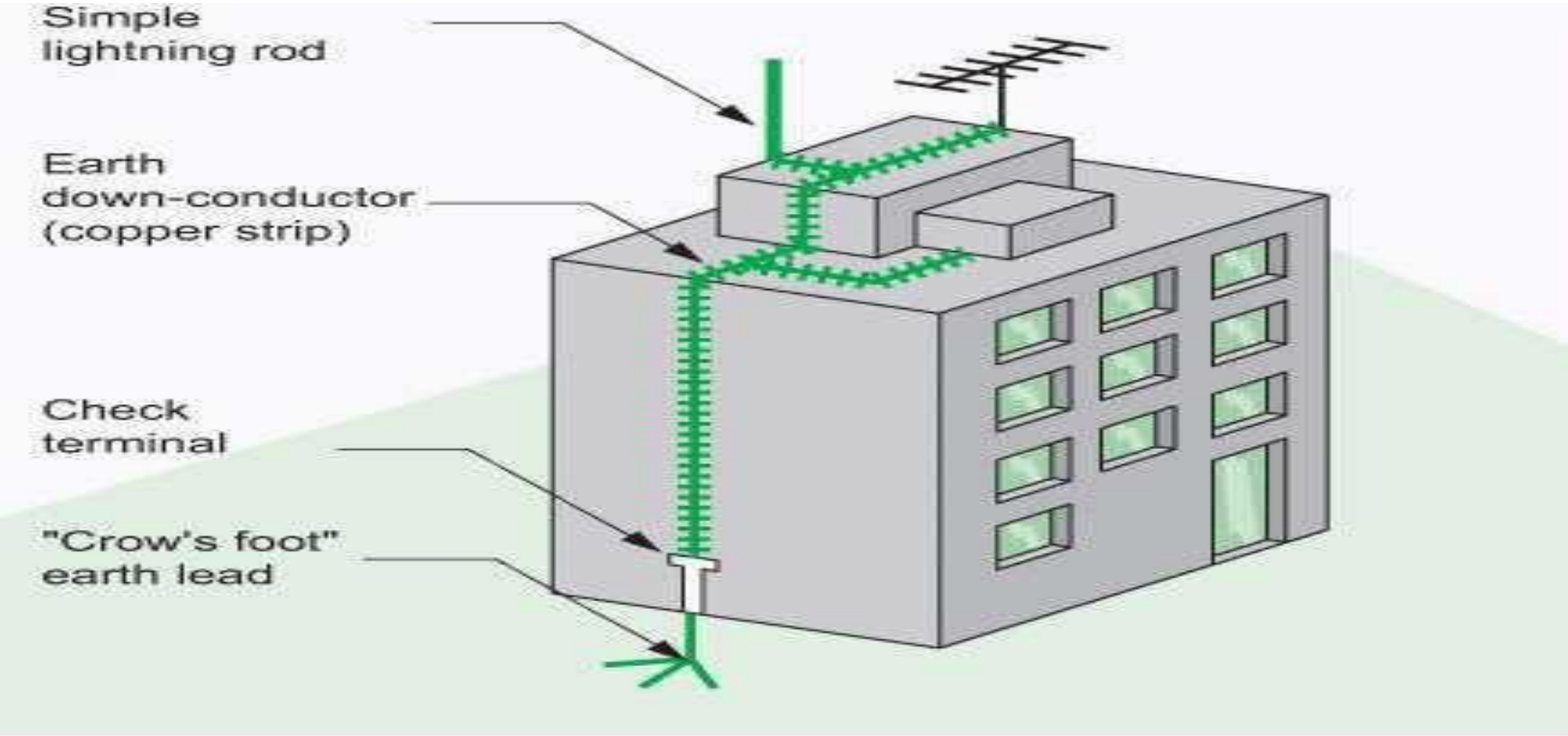

9. SURGE PROTECTION DEVICES (SPD) (FORMERLY CALLED TVSS)

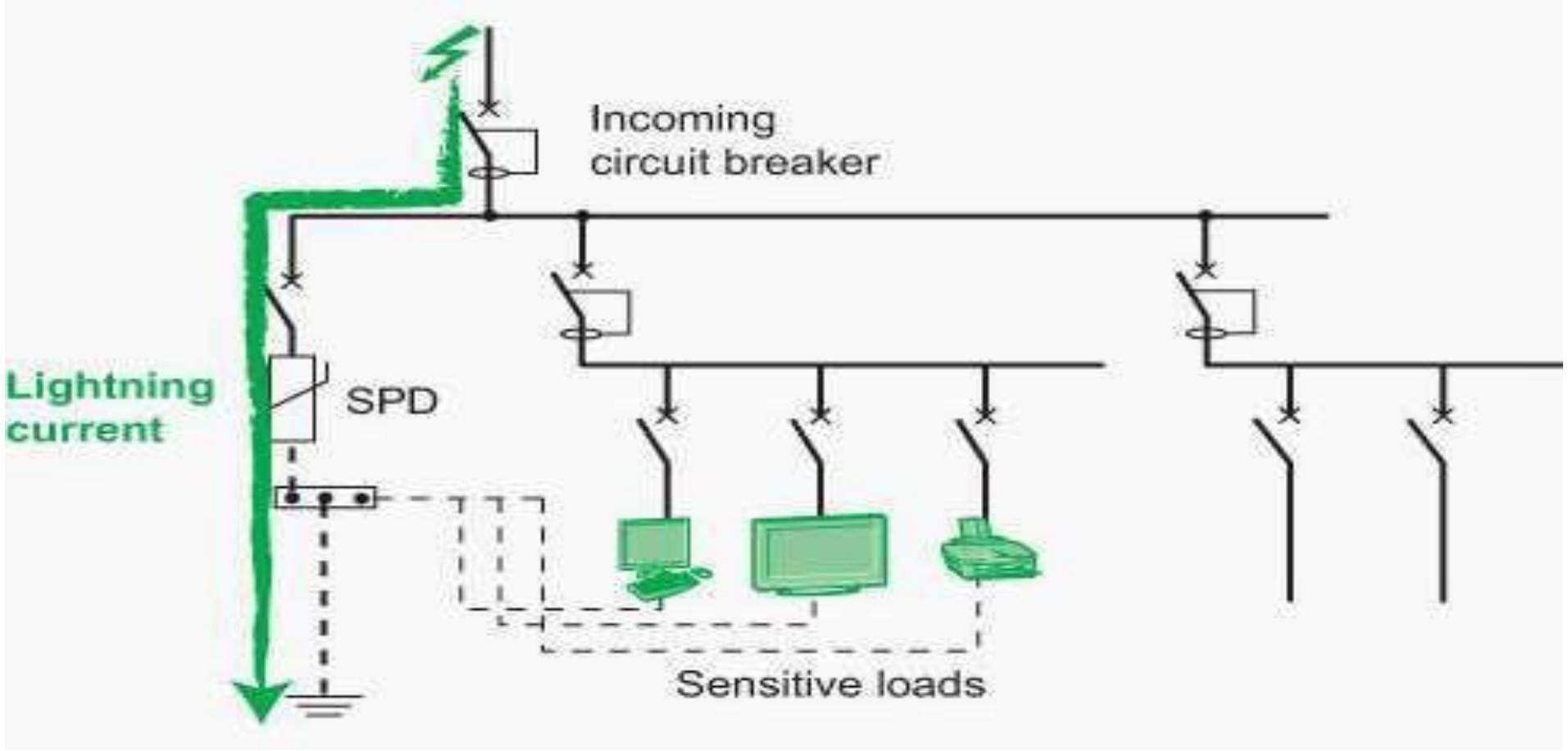

Earth resistivity

- The term “earth resistivity” expressed in ohm-cm is one basic variable affecting resistance to earth of an electrode.
- Best location and depth of low resistance electrodes.
- Studies are made when new electrical unit is being constructed; a generating station ,substation, transmission tower or telephone central office.
- It is used to locate ore bodies, clays and water bearing gravel beneath the earth surface, depth of bed rock.
- Earth resistivity may be used to indicate the degree of corrosion to be expected in underground pipelines for water, oil ,gas, gasoline etc.
- In general where the resistivity value are low tends to increase corrosion. This information can also be used for installing cathodic protection.

How earth resistivity is measured

- A four terminal instrument is used to measure the earth resistivity.
- Four small sized electrodes driven down to same depth and equal distances apart in a straight line.
- Four separate lead wires connect the electrodes to four terminals on the instrument. Hence the name four- terminal method.

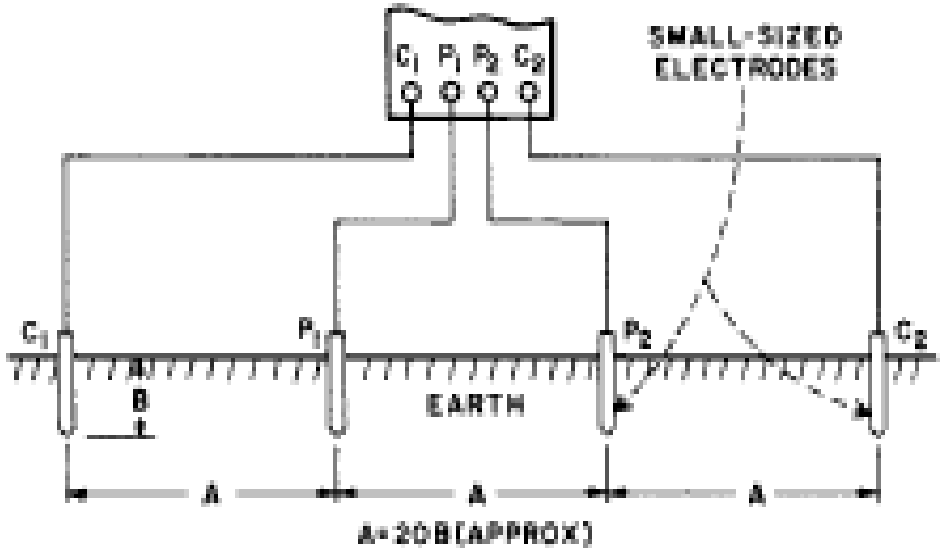

Fig. 1: Four-terminal method of measuring earth resistivity

$$\rho = 2\pi AR$$

Where
ρ is average soil resistivity
π is constant 3.14
A is the distance between electrodes
R- is magger earth test reading

Type of soil v/s resistivity

- Whether a soil is largely clay or sandy , for example can change earth resistivity a great deal.

- It is not easy to define exactly a given soil; “clay” can cover a wide variety of soils. Therefore we can not say that any given soil has a resistivity of so many ohm-cm.

How soil affect resistivity

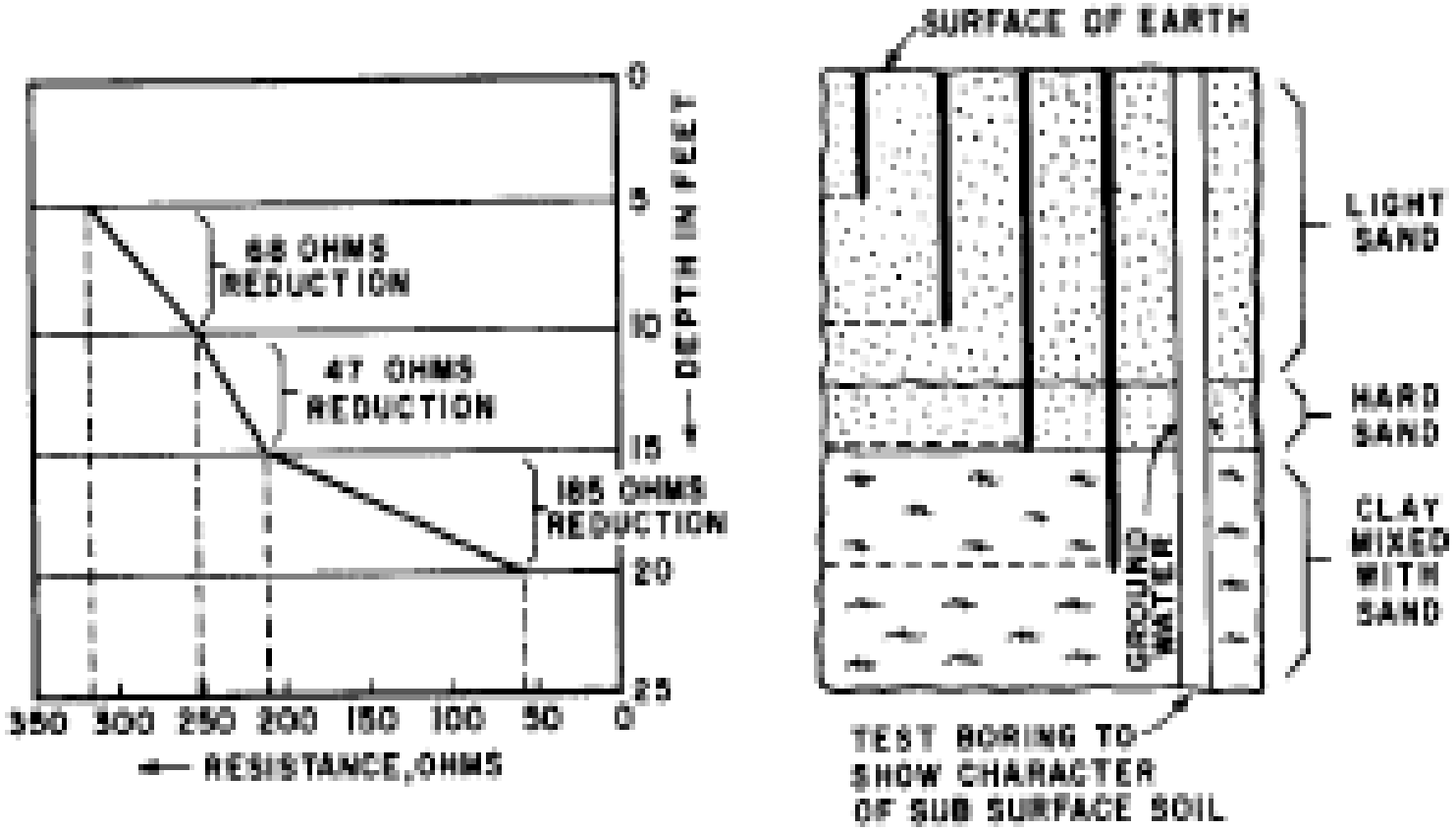

Fig. 3: Deeper earth electrodes lower the resistance. These graphs show the relation between character of soil and resistance of driven electrode at increased depths.

Resistivity of different soils

Table II: Resistivities of Different Soils*

Soil	Resistivity Ohm-cm (Range)
Surface soils, loam, etc.	100 - 5,000
Clay	200 - 10,000
Sand and gravel	5,000 - 100,000
Surface limestone	10,000 - 1,000,000
Shales	500 - 10,000
Sandstone	2,000 - 200,000
Granites, basalts, etc.	100,000
Decomposed gneisses	5,000 - 50,000
Slates, etc.	1,000 - 10,000

Effect of moisture and dissolved salt

Table III: Effect of Moisture Content on Earth Resistivity*

Moisture Content, Percent by Weight	Resistivity (Ohm-cm)	
	Top Soil	Sandy Loam
0.0	$1,000 \times 10^6$	$1,000 \times 10^6$
2.5	250,000	150,000
5.0	165,000	43,000
10.0	53,000	22,000
15.0	21,000	13,000
20.0	12,000	10,000
30.0	10,000	8,000

Table IV: Effects of Salt Content on Earth Resistivity*

Added Salt Percent by Weight of Moisture	Resistivity, (Ohm-cm)
0.0	10,700
0.1	1,800
1.0	460
5.0	190
10.0	130
20.0	100

Effect of temperature on resistivity

Table V: Effect of Temperature on Earth Resistivity*

Temperature		
C	F	Resistivity (Ohm-cm)
20	68	7,200
10	50	9,900
0	32 (water)	13,800
0	32 (ice)	30,000
-5	23	79,000
-15	14	330,000

Seasonal variation in earth resistivity

- Permanent moisture content (relatively speaking).
- Constant temperature (below frost line; again, relatively speaking).

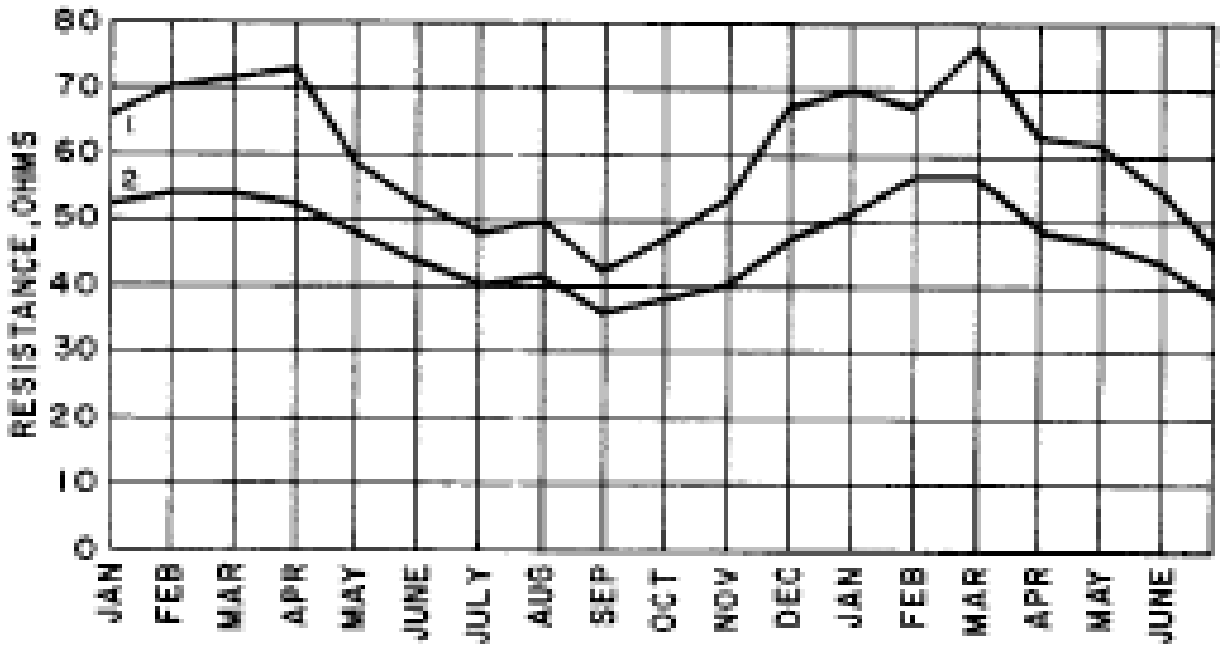

Fig. 4: Seasonal variation of earth resistance with an electrode of 3/4" pipe in stony clay soil. Depth of electrode in earth is 3 ft for Curve 1 and 10 ft for Curve 2 (source: Ref. 9, page 76)

Good electrode location

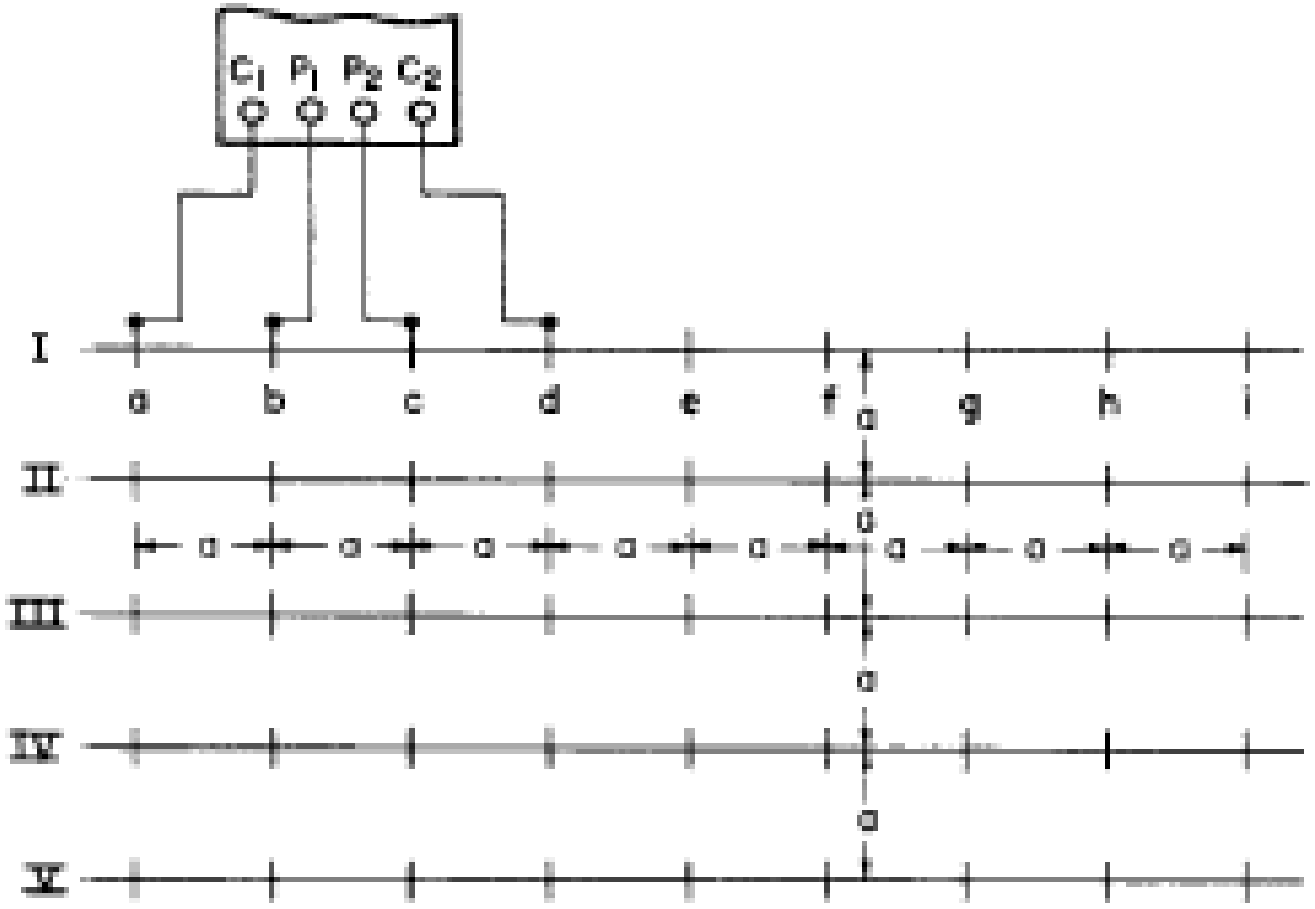

Fig. 5: Method of prospecting for best earth electrode location to a depth **a**.
Location giving lowest reading on the Megger ground tester is the most desirable.

Alternate method

- Drive rods or pipes in various locations to such depths as may prove practicable.
- Testing their resistance while they are being driven.
- In this manner , you can tell at once when moisture or good conducting earth is reached.

Why low earth resistance?

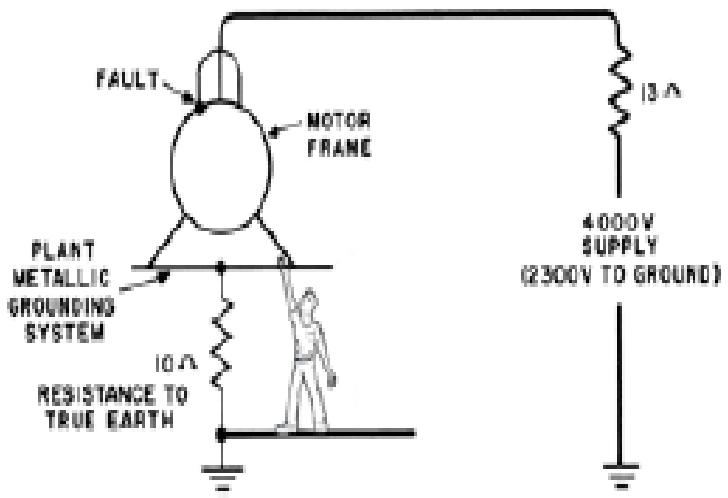

Fig. 7: Example of an electrical circuit with too high an earth resistance

[5] I = E/R = 2,300/(10 + 13) = 100 amperes

- If earth resistance is 10 ohms.

  Voltage = (2300/23)x10=1000volts

- If earth resistance is 1 ohm
- Voltage across body =(2300/14)x1=164 volts
- It is more safe as compared to previous case.

Nature of an earth electrode

- Resistance to current through an earth electrode has three components.
- Resistance to it.
- Contact resistance between electrode and the soil adjacent to it.
- Resistance of the surrounding earth.

Electrode resistance

- Rods, pipes, masses of metal , structures and other devices are commonly used for earth connections.

- These are usually of sufficient size or cross section that their resistance is a negligible part of total resistance.

Resistance of surrounding earth

- An electrode driven into earth of uniform resistivity radiates current in all directions. Think of the electrode as being surrounded by shell of earth, all of equal thickness.
- The earth shell nearest to electrode naturally has the smallest surface area and so offer the greatest resistance. The next earth shell is somewhat larger in area and offers less resistance.
- Finally a a distance from the electrode will be reached where inclusion of additional earth shells does not add significantly to resistance of the earth surrounding the electrode.
- It is this volume of soil that determine the effectiveness of the ground electrode and which therefore must be effectively measured in order to make this determination
- The resistance of surrounding earth will be largest of the three component making up the resistance of ground connection.
- earth resistivity depends on the soil material, the moisture content and the temperature.
- It is far from constant, the predicable value ranging generally from 500 to 50,000 ohm-cm.

Principles of earth resistance testing

- The resistance to earth of any system of electrodes theoretically can be calculated from formula based upon the general resistance formula.

- $R = \rho x (L/A)$

Where ρ is the resistivity of the earth in ohm-cm,

L is the length of the conducting path

A is the cross sectional area of the path.

Earth resistance testing

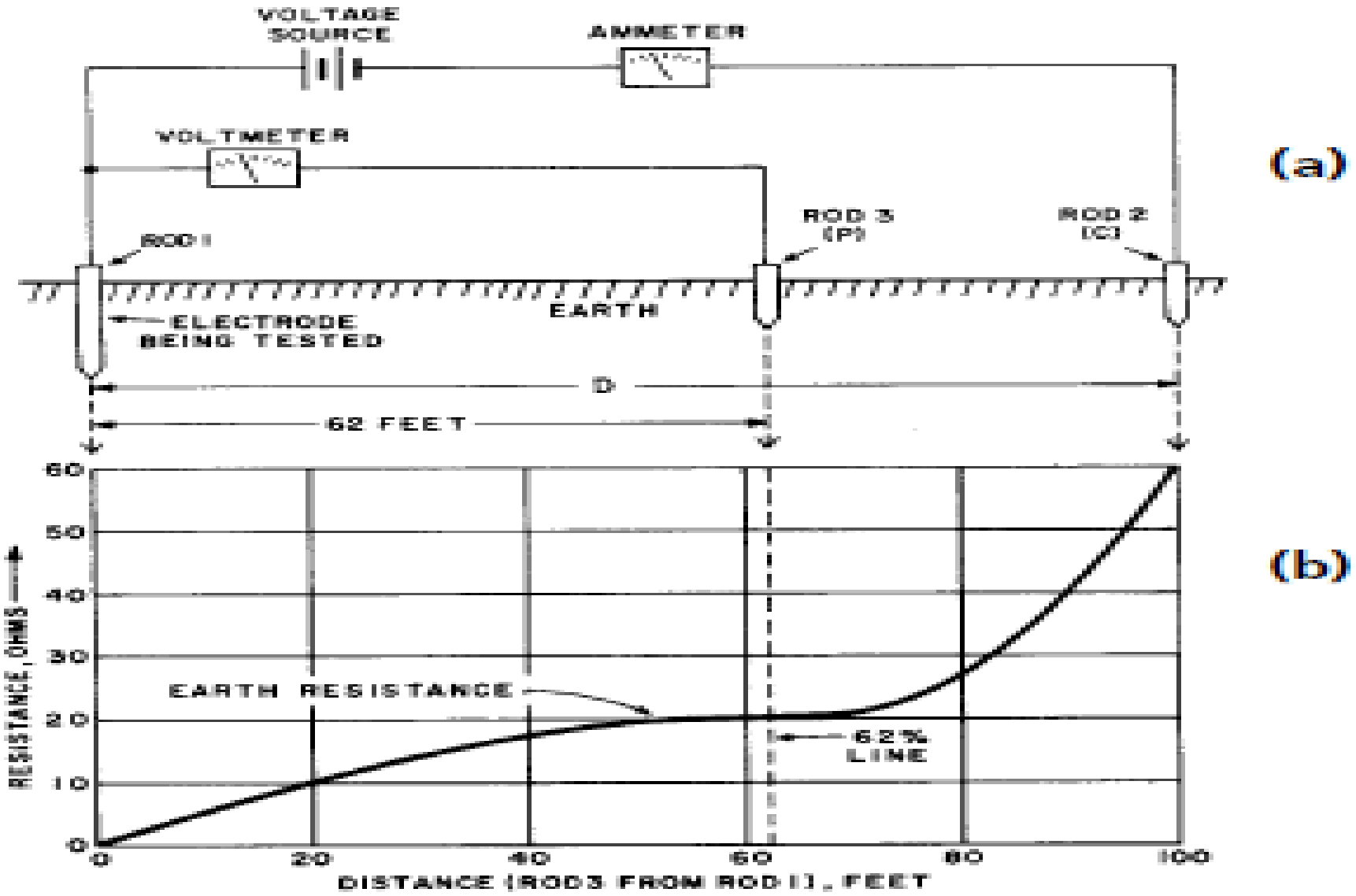

g. 10: Principle of an earth resistance test

Effect of rod size

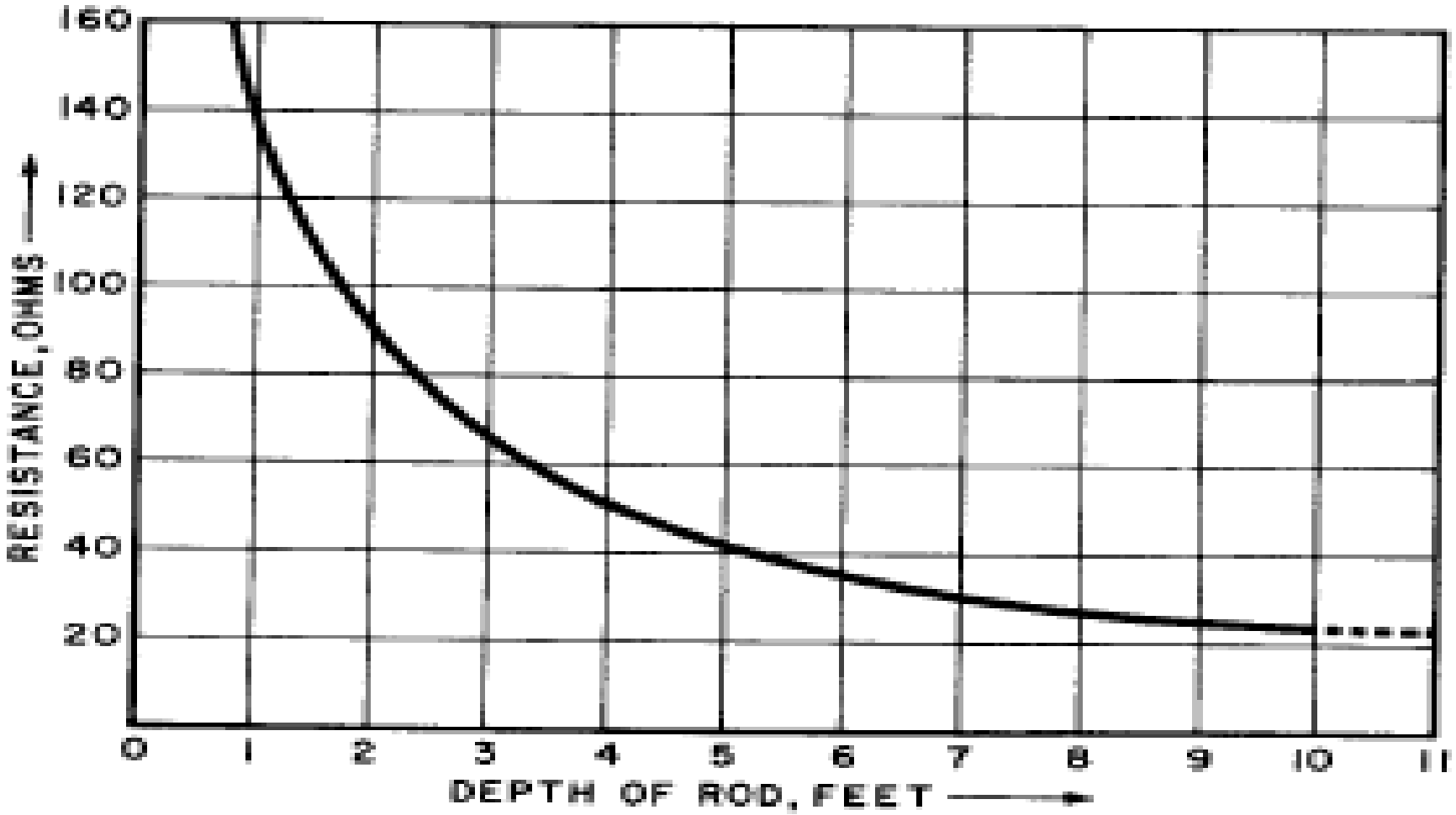

Fig. 15: Earth resistance decreases with depth of electrode in earth (Source: Ref 19)

Use of multiple rods

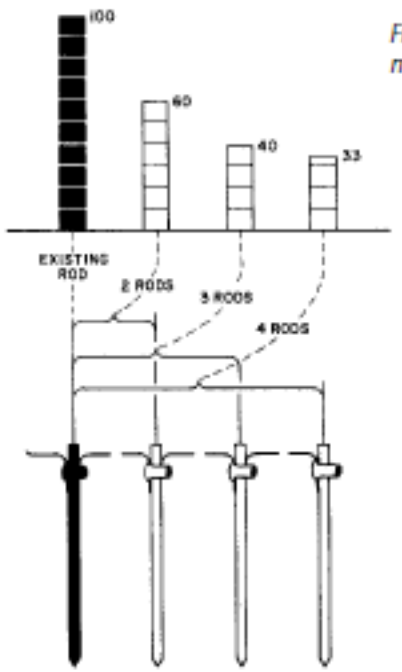

Fig. 17: Average results obtained from multiple-rod earth electrodes[8]

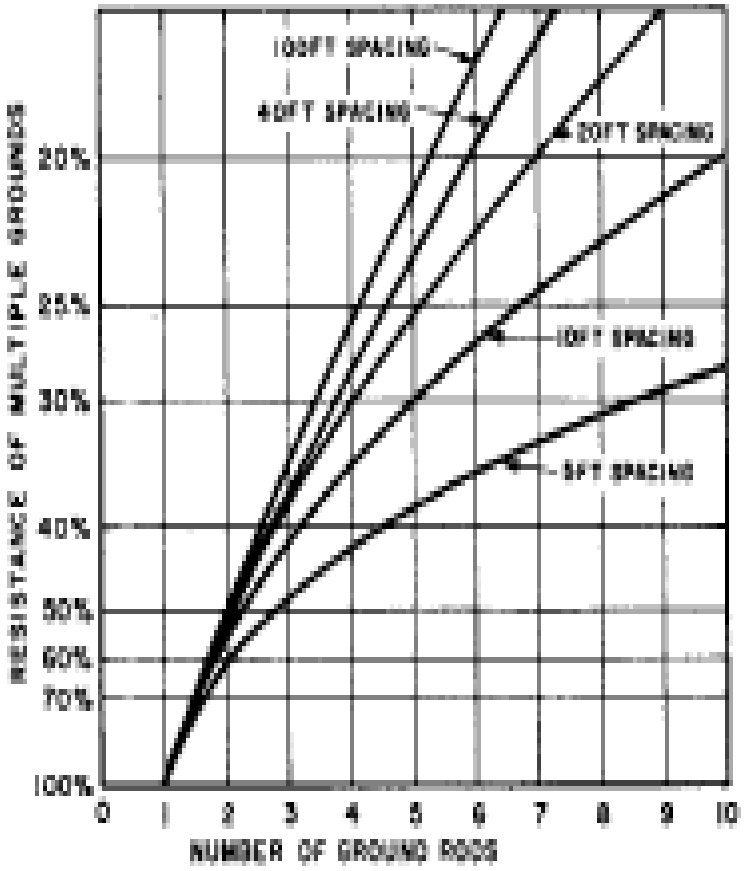

Fig. 18: Comparative resistance of multiple-rod earth electrodes. Single rod equals 100%[9]

[8, 9] Source: Reference 20 (page 76)

Effect of increase in diameter

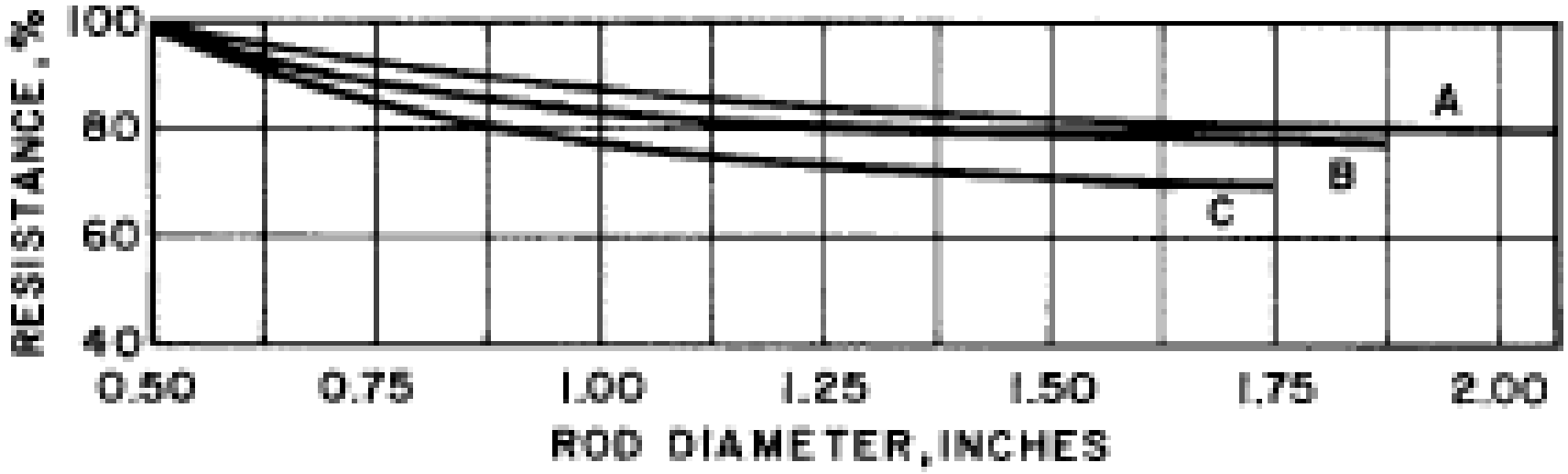

Fig. 16: Diameter of a rod has little effect on its earth resistance

Curve A, from Ref. 19

Curve B, average of Underwriters Laboratories tests at Chicago

Curve C, average of Underwriters Laboratories tests at Pittsburgh

Treatment of soil

- Good way to improve earth resistance.
- Consider the corrosive effect on the electrode
- Magnesium sulphate, copper sulphate, and ordinary rock salt are non corrosive material
- Rock salt is cheaper
- Soluble sulphates attack cement
- Specialized conductive cement like bentonite.
- Chemical treatment is not permanent way to improve. Can washaway due to rains.

Trench method

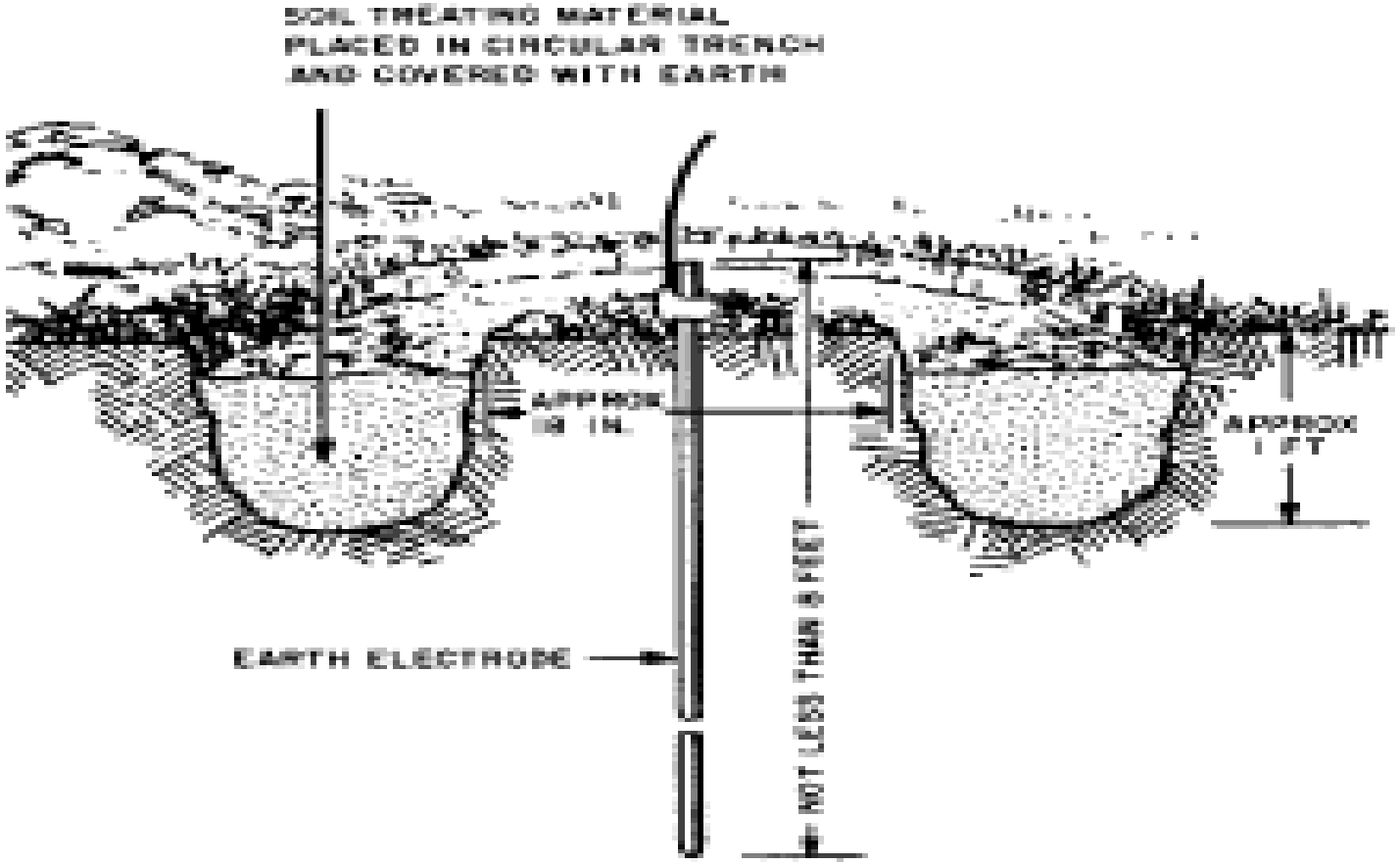

Fig. 19: Trench method of soil treatment [10]

Chemical treatment

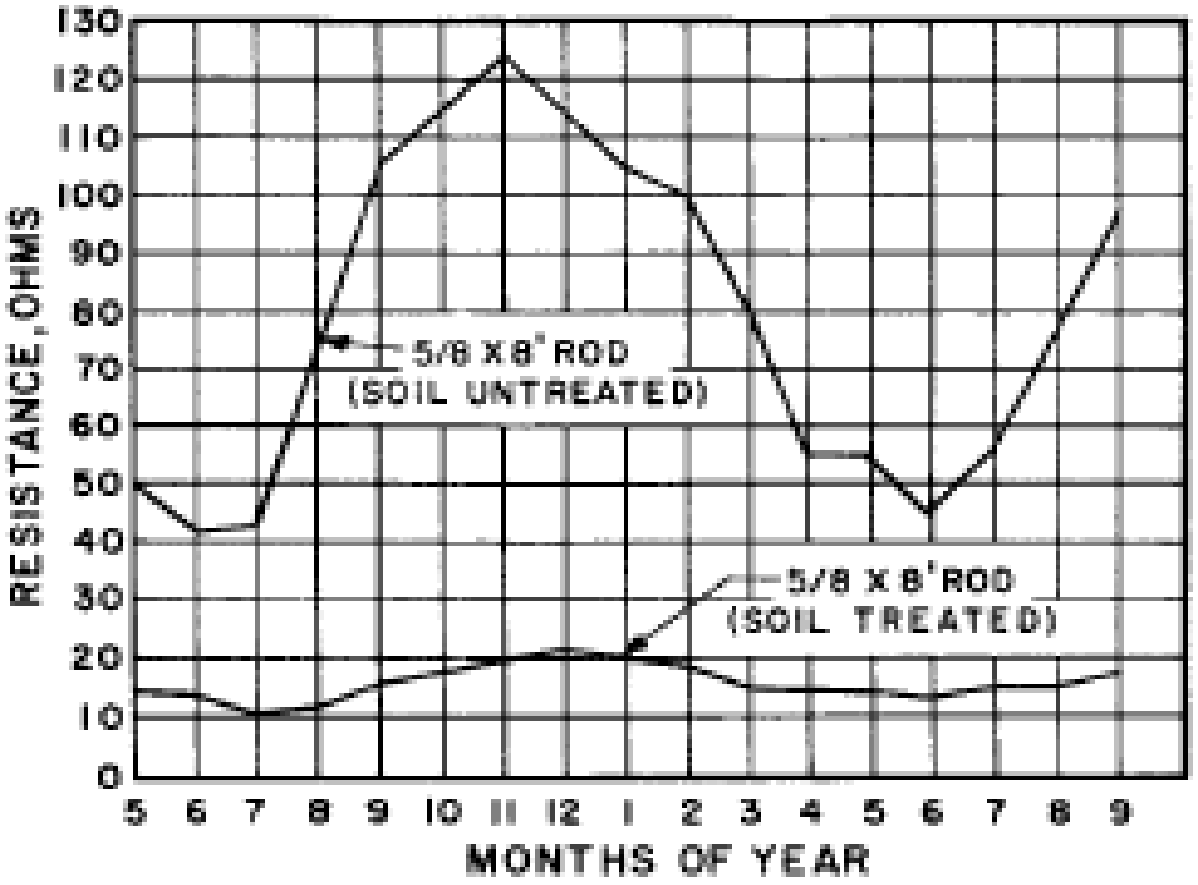

Fig. 20: Chemical treatment of soil lessens seasonal variation of electrodes' earth resistance [11]

Large ground system

- Large ground system , such as those found in substations and power stations are an important part of protection system.
- They ensure that fault current will enable protection devices to operate correctly.
- A sub station must have a low ground resistance to reduce excessive voltage developing during fault which can endanger safety of nearby people or damage equipment.
- after installation it is vital to check that electrical grounding system meets the design criteria and should be measured periodically to ensure corrosion or changes in soil reistivity do not have an adverse effect.
- To obtain a sufficiently low value of ground resistance, ground system may consist of an earth mat covering a large area or many interconnected rods.
- Suitable test methods must be used for large systems to ensure that valid readings are obtained.
- This is unlike , a lightening protection system or residential ground which is simple to test.

Testing challenges in large ground systems

- The physically large area of a substation /power station ground system results in large “resistance” area and consequently , the long distances to the test probes.
- The large resistance area typically gives ground resistance values of less than 0.5 ohms. Test instrument resolution is critical if small variance in readings are to be observed.
- Large electrical networks contain noise consisting of the frequency of the power utility and it’s harmonics plus high frequency noise from switching and induced signals from other sources.
- Ground tester must retrieve and analyse a small test signal in a much larger environment.
- Most ground test inject a single frequency(128hz) which is adequate in most situations because it avoids harmonics

Addressing testing challenges of large grounding system

- Slope method at 20,40 and 60%
- A variable test frequency can help to remove stray noise
- High peak to peak interference suppression level
- A sophisticated filter system to reject more noise.
- Various current settings to improve the signal to noise ratio when necessary.

Drawback of fall of potential method

- There are following drawback of fall of method

1. It is extremely time consuming.

2. Individual ground electrodes must be disconnected from system to be measured.

3. There are situations where disconnection is not possible.

Clamp on method

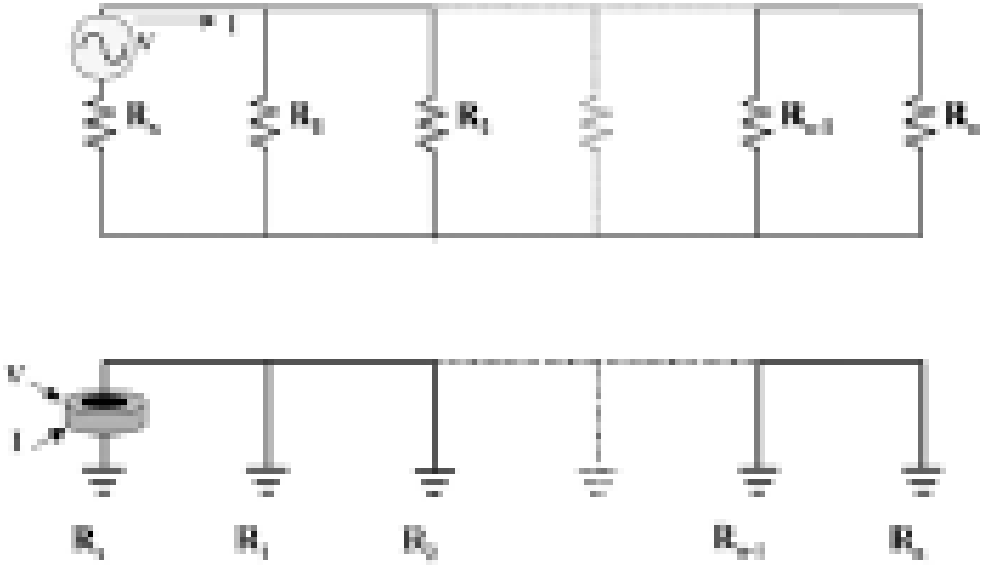

$$V/I = R_X + \frac{1}{\sum_{k=1}^{n} \frac{1}{R_k}} \quad \text{where, normally} \quad R_X >> \frac{1}{\sum_{k=1}^{n} \frac{1}{R_k}}$$

Fig 22: Basic clamp-on ground testing methodology

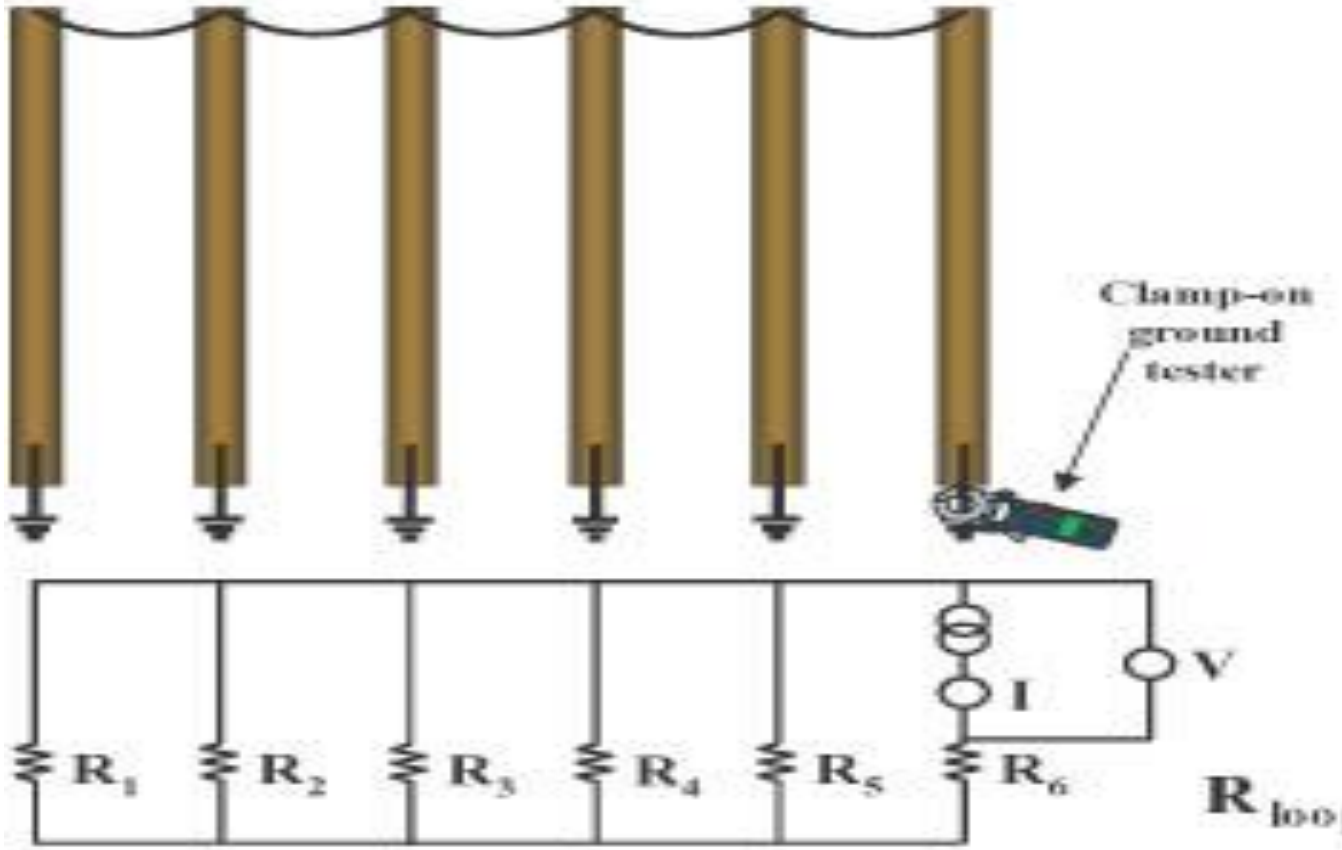

$$R_{loop} = V_{loop} \div I_{loop}$$

Touch and step potential

- Touch potential is the term given to the potential difference a person might experience across their body if they were standing on the ground outside the earthed perimeter fence of a substation and touching the fence at the time a fault to earth occur.

- This is the potential difference a person would experience between their feet if they walked over the ground in which a fault current existed.

Earth resistance value

- Major power station= 0.5 Ohm.
- Major Sub-stations= 1.0 Ohm
- Minor Sub-station = 2 Ohm
- Neutral Bushing. =2 Ohm
- Service connection = 4 Ohm
- Medium Voltage Network =2 Ohm
- L.T.Lightening Arrestor= 4 Ohm
- L.T.Pole= 5 Ohm
- H.T.Pole =10 Ohm

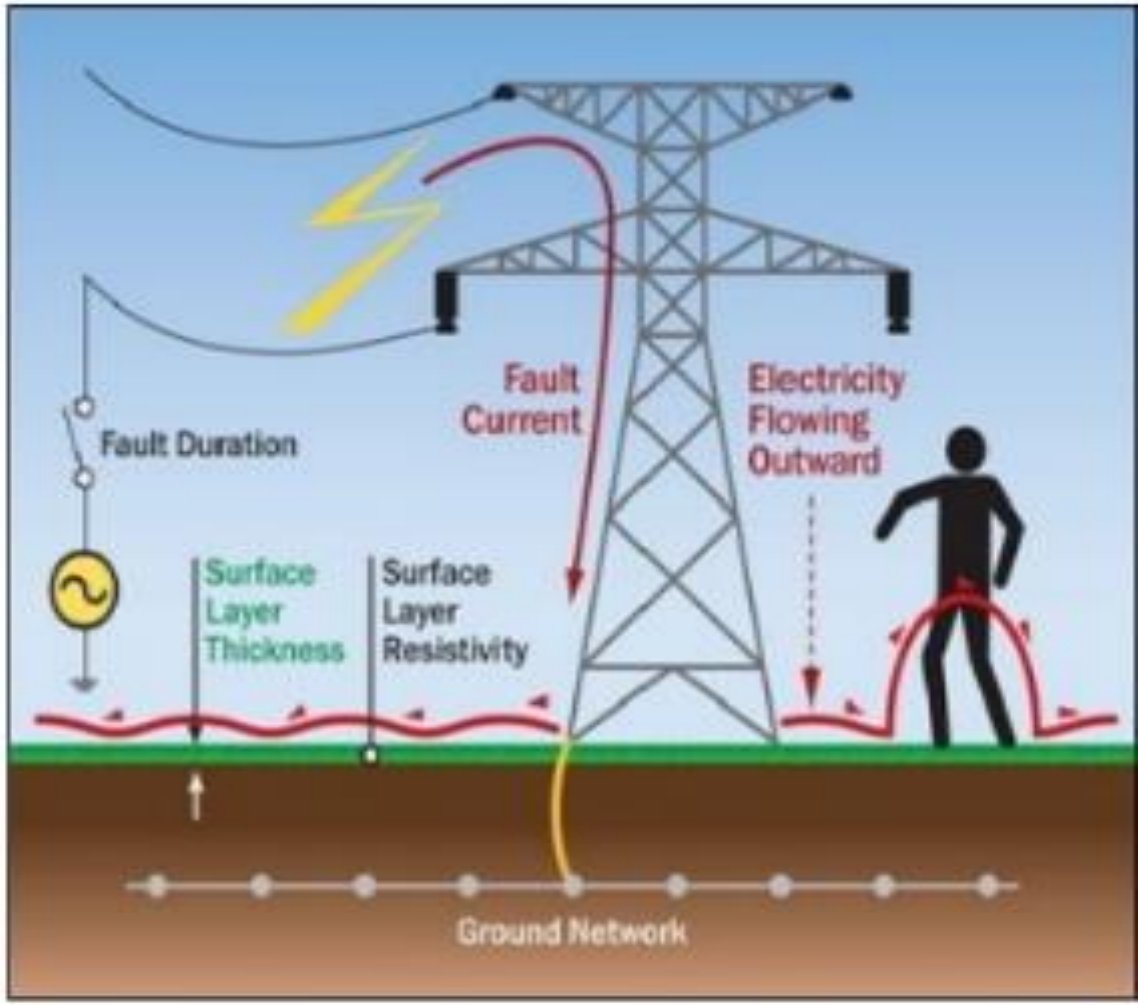

Conclusion:-

- Grounding and Earthing systems form the first line of defense in every type of electrical systems.
- The system may be a generator/transformer/ housing installation/generating station/etc.
- So it is strictly advised to know the basic concepts of grounding as far as electrical engineering is concerned.

Miguel Costa 2005

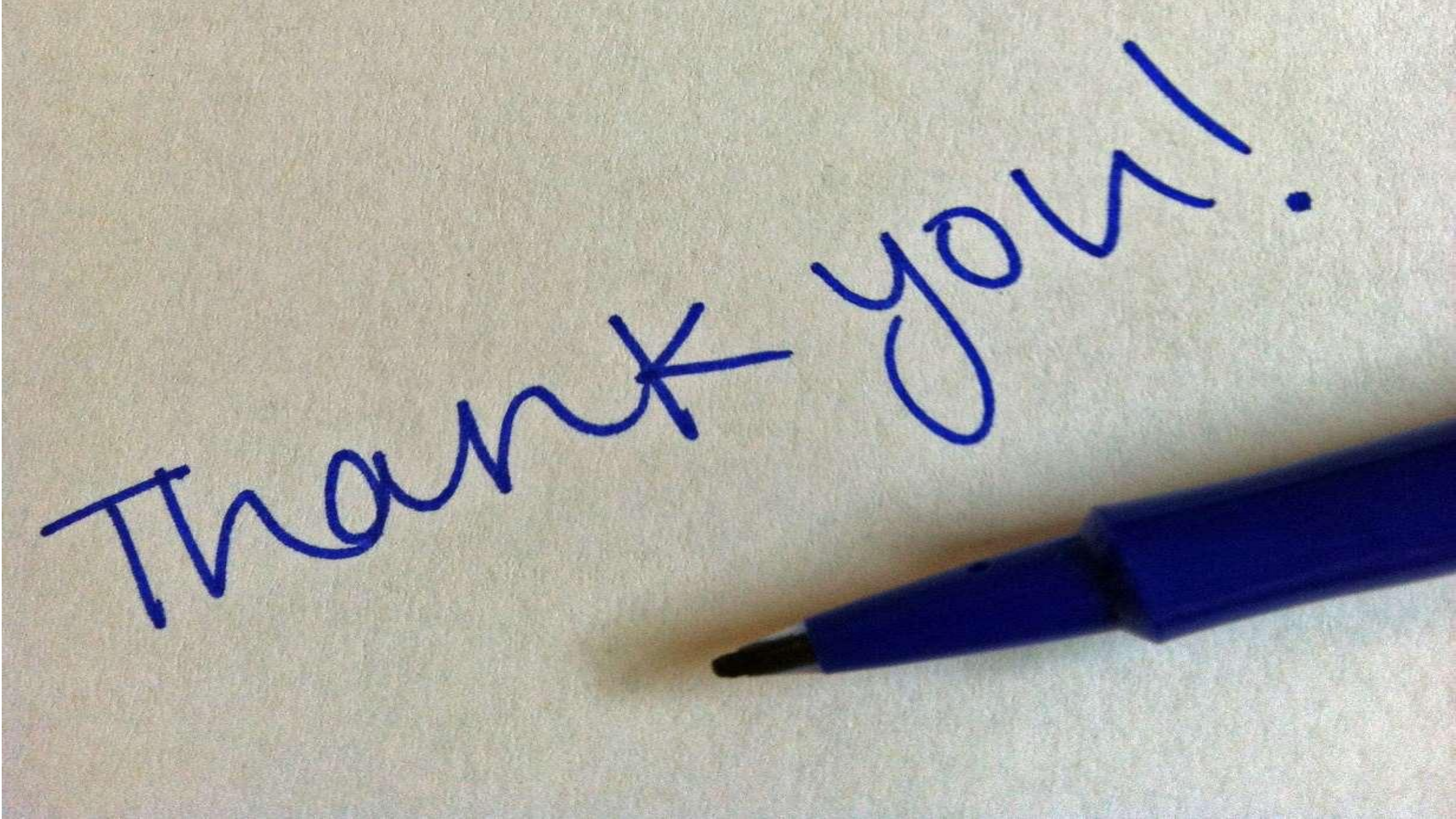
Thank you!